Broîl Kîng®

Broîl Kîng

CROWN 410
8650-52
8650-53
CROWN 410 R
8650-53R

Broîl Kîng

CROWN 430
8650-62
8650-63
CROWN 430 R
8650-63R

Broîl Kîng

CROWN 480
8650-82
8650-83

Onward Manufacturing Company Limited
Since 1906
585 Kumpf Drive
Waterloo, Ontario, Canada
N2V 1K3

50084-R71EU REV D 06/22

PARTS LIST / LISTE DES PIECES

KEY #	ITEM #	DESCRIPTION	8650-52	8650-53	8650-53R	8650-62	8650-63	8650-63R	8650-82	8650-83
1	50909-E441	CASTING BOTTOM	1	1	1	1	1	1	1	1
2	56005-801	LID ASSEMBLY	1	1	1	1	1	1	1	1
3	52019-911	FIRE BOX END CAP - LH	1	1	1	1	1	1	1	1
4	52019-931	FIRE BOX END CAP - RH	1	1	1	1	1	1	1	1
5	52049-042	HEAT SHIELD	3	3	3	3	3	3	3	3
6	52049-142	HEAT SHIELD	1	1	1	1	1	1	1	1
7	Y-11544S	SCREW - BURNER	4	4	4	4	4	4	4	4
8	S21242	BURNER CLIP	4	4	4	4	4	4	4	4
12	52315-151	HOOD PANEL	1	1	1	1	1	1	1	1
13	52035-914	FIRE BOX FRONT TRIM	1	1	1	1	1	1	1	1
18	52001-981	COOKING GRID	4	4	4	4	4	4	4	4
20	52005-991	GRID - WARMING RACK	1	1	1	1	1	1	1	1
21	59805-012	CONTROL ASSEMBLY	1	●	●	●	●	●	●	●
	59805-013	CONTROL ASSEMBLY	●	1	1	●	●	●	●	●
	59805-032	CONTROL ASSEMBLY	●	●	●	1	●	●	●	●
	59805-033	CONTROL ASSEMBLY	●	●	●	●	1	1	●	●
	59805-072	CONTROL ASSEMBLY	●	●	●	●	●	●	1	●
	59805-073	CONTROL ASSEMBLY	●	●	●	●	●	●	●	1
22	52015-903	COLLECTOR BOX	1	1	1	1	1	1	1	1
24	10111-16A	CONNECTOR HOSE	1	1	1	1	1	1	1	1
25	52924-144D	BURNER	4	●	●	4	●	●	4	●
	52924-144E	BURNER	●	4	4	●	4	4	●	4
26	52002-298A	CONTROL KNOB	4	4	4	4	4	4	4	4
27	52001-298A	CONTROL KNOB	●	●	●	1	1	1	2	2
28	52025-124CRO	CONTROL COVER	1	1	1	●	●	●	●	●
	52025-244CRO	CONTROL COVER	●	●	●	1	1	1	●	●
	52025-304CRO	CONTROL COVER	●	●	●	●	●	●	1	1
31	52009-918	EDGE CAP - LH	1	1	1	1	1	1	1	1
32	52009-938	EDGE CAP - RH	1	1	1	1	1	1	1	1
34	S13473-073	HOSE-SIDE BURNER	●	●	●	1	●	●	1	●
	S13473-079	HOSE-SIDE BURNER	●	●	●	●	1	1	●	1
34A	Y-11230	COTTER PIN	●	●	●	1	1	1	1	1
35	52039-101	SIDE BRACE	2	2	2	2	2	2	2	2
36	52809-957	TUBE-REAR BURNER ASSY	●	●	●	●	●	●	1	1
37	53139-908	SHELF BRACKET SUPPORT	4	4	4	4	4	4	4	4
38	Y-12620	SHELF LOCK CLIP	4	4	4	4	4	4	4	4
39	52045-111	BRACE - FRONT / REAR	2	2	2	2	2	2	2	2
41	10342-E13	ELECTRODE	1	1	1	1	1	1	1	1
42	10342-E22	ELECTRODE	1	1	1	1	1	1	1	1
44	10342-42	ELECTRONIC IGNITOR	1	1	1	●	●	●	●	●
	10342-43	ELECTRONIC IGNITOR	●	●	●	1	1	1	●	●
	10342-44	ELECTRONIC IGNITOR	●	●	●	●	●	●	1	1
44A	25070-925	WIRE - IGNITOR	1	1	1	1	1	1	1	1
44B	25070-931	BUTTON - IGNITOR	1	1	1	1	1	1	1	1
48	52004-007	DRIP PAN	1	1	1	1	1	1	1	1
49	51009-007	GREASE PAN	1	1	1	1	1	1	1	1
50	52059-101	GREASE RAIL	1	1	1	1	1	1	1	1
51	52009-104	FLAV-R-WAVE ®	4	4	4	4	4	4	4	4
52	52149-004	GREASE SHIELD	3	3	3	3	3	3	3	3
56	24005-12A	HANDLE	1	1	1	1	1	1	1	1
58	24009-936	BEZEL	2	2	2	2	2	2	2	2
59	10081-BK630	NAMEPLATE	1	1	1	1	1	1	1	1
60	10571-6	HEAT INDICATOR	1	1	1	1	1	1	1	1
65	20005-000	MATCH LIGHT - STICK	1	1	1	1	1	1	1	1
69	51585-106	FRONT PANEL	1	1	1	1	1	1	1	1
80	51189-101	SIDE PANEL	2	2	2	2	2	2	2	2
81	Y-11992	SCREW 1/4-20 x 2 1/4	4	4	4	4	4	4	4	4
87	Y-11793	NUT 1/4-20	4	4	4	4	4	4	4	4
90	51625-131	BASE	1	1	1	1	1	1	1	1
99	32001-151	CASTOR BRACKET CAP	4	4	4	4	4	4	4	4
100	51639-108	CASTOR BRACKET	2	2	2	2	2	2	2	2
101	51039-101	CASTOR BRACKET SUPPORT	2	2	2	2	2	2	2	2
102	10892-286	CASTOR	4	4	4	4	4	4	4	4
103	21039-301	TANK BRACKET	1	1	1	1	1	1	1	1

PARTS LIST / LISTE DES PIECES

KEY #	ITEM #	DESCRIPTION	8650-52	8650-53	8650-53R	8650-62	8650-63	8650-63R	8650-82	8650-83
107	Y-12870	WASHER	8	8	8	8	8	8	8	8
113	10342-T14	SIDE BURNER ELECTRODE	●	●	●	1	1	1	1	1
114	53109-111	SHELF - RIGHT	1	1	1	1	1	1	1	1
115	53109-111	SHELF - LEFT	1	1	1	●	●	●	●	●
	53109-151	SHELF - SB - LEFT	●	●	●	1	1	1	1	1
123	Y-12117	BUSHING	●	●	●	2	2	2	2	2
124	53004-271	SIDE BURNER BODY	●	●	●	1	1	1	1	1
125	53000-251	SIDE BURNER COVER	●	●	●	1	1	1	1	1
126	10390-E10D	SIDE BURNER	●	●	●	1	●	●	1	●
	10390-E10E	SIDE BURNER	●	●	●	●	1	1	●	1
128	53009-951	GRID	●	●	●	1	1	1	1	1
129	Y-11990	HEX NUT	●	●	●	●	●	●	1	1
130	27905-354	BURNER ROTISSERIE	●	●	●	●	●	●	1	1
131	10693-099	REAR BURNER-ORIFICE	●	●	●	●	●	●	1	●
	10693-104	REAR BURNER-ORIFICE	●	●	●	●	●	●	●	1
133	S15271	HANDLE	●	●	1	●	●	1	1	1
134	S15270	BALANCER	●	●	1	●	●	1	1	1
135	S15299	WASHER	●	●	1	●	●	1	1	1
136	S15263	BUSHING	●	●	1	●	●	1	1	1
137	S15256	SPIT ROD	●	●	1	●	●	1	1	1
138	S15287	4 PRONG FORKS	●	●	2	●	●	2	2	2
139	57039-901	ROTISSERIE BRACKET	●	●	1	●	●	1	1	1
140	S21125S	SCREW #8 X 1/2	8	8	8	8	8	8	8	8
141	Y-11559	BOLT 1/4-20 X 1	2	2	2	2	2	2	2	2
142	S21125	SCREW #8 X 1/2	8	8	8	8	8	8	8	8
145	S21235	HINGE PIN	2	2	2	2	2	2	2	2
146	S21233	HITCH PIN CLIP	2	2	2	2	2	2	2	2
147	Y-11231	LID BUMPER	4	4	4	4	4	4	4	4
154	Y-12129	WIRE CLIP	2	2	2	2	2	2	2	2
157	Y-12835	SCREW #6-32 X 1/4	4	4	4	4	4	4	4	4
158	Y-12641	SCREW SHOULDER #8 X 1/2	●	●	●	2	2	2	2	2
159	S21127S	SCREW #8-32 X 7/16	8	8	8	10	10	10	12	12
160	Y-29304	SCREW #10-24 X 3/8	10	10	10	10	10	10	10	10
161	Y-12310	SCREW 1/4-20 X 3/4	8	8	8	8	8	8	8	8
162	S21084	SCREW #14 X 3/8	8	8	8	8	8	8	8	8
169	S21061	WING NUT	●	●	2	●	●	2	2	2
171	S15246	MOTOR	●	●	1	●	●	1	1	1
172	S15508	ELECTRODE	●	●	●	●	●	●	1	1
173	S21362	SPRING	●	●	●	●	●	●	1	1
180	S35095	SCREW #10-24 X 5/8	●	●	2	●	●	2	2	2
186	Y-12865	SCREW 1/4-20 X 3/4	34	34	34	34	34	34	34	34

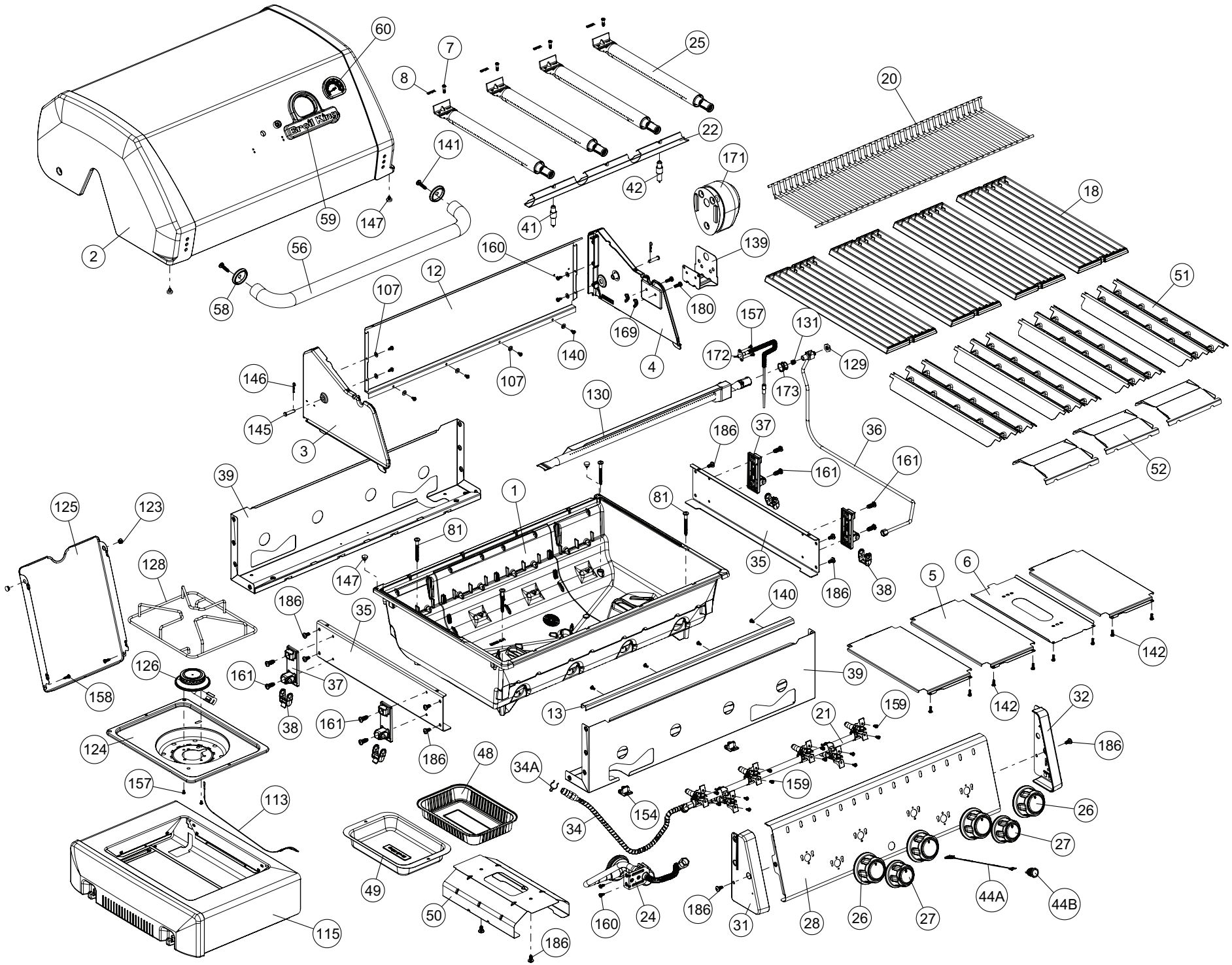
60
7
8
25
20
22
141
171
42
41
59
147
18
2
56
160
139
12
107
180
51
58
169
157
131
172
140
4
129
146
107
173
130
145
186
37
36
3
161
161
52
39
1
81
125
123
81
35
147
128
186
38
5
6
140
186
35
142
126
161
37
39
142
158
38
13
159
32
21
161
124
186
186
48
34A
159
157
113
154
26
34
27
49
44A
44B
50
160
24
186
31
28
26
27
115
186

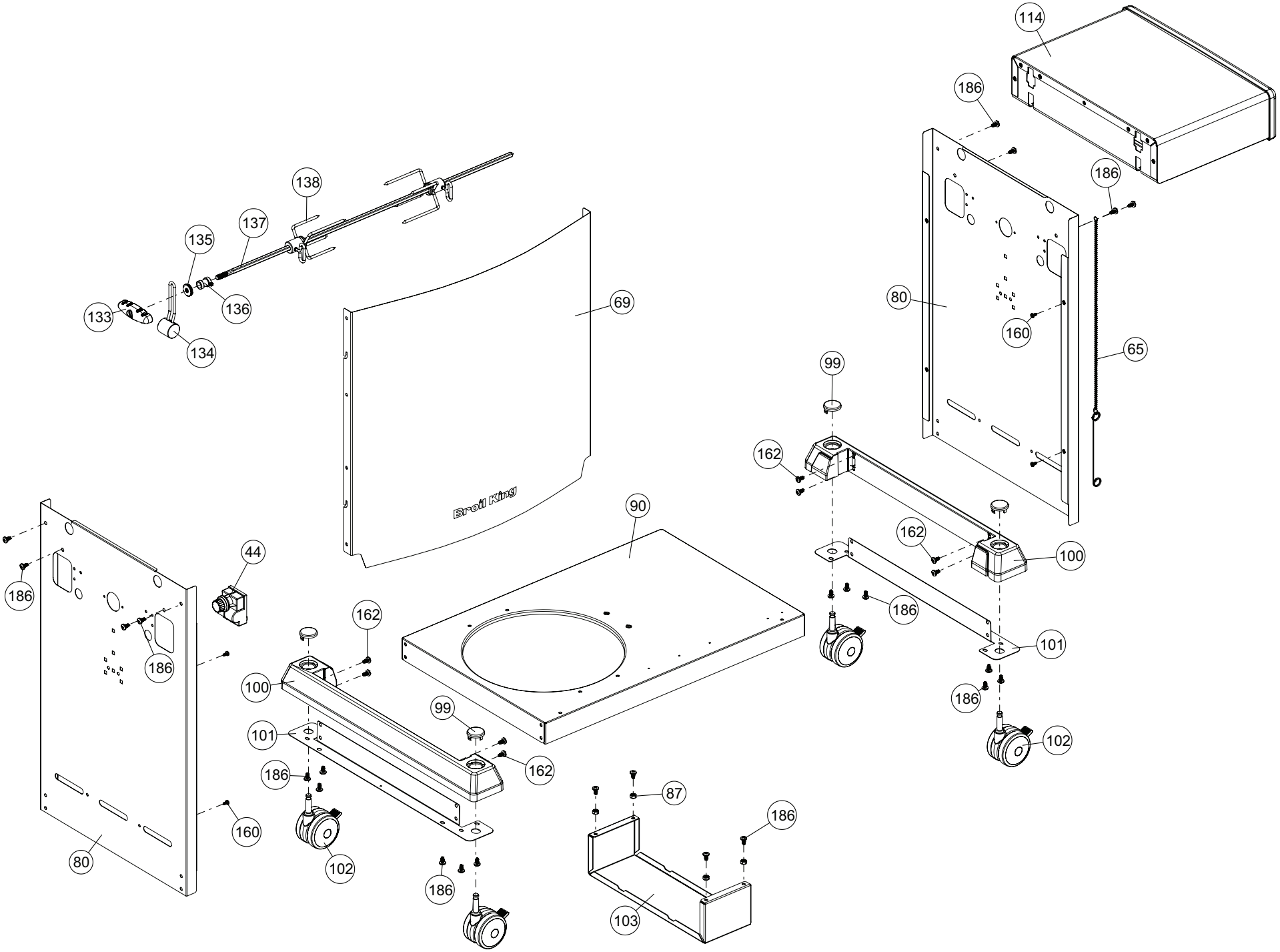
114
186
186
138
137
135
136
133
134
69
80
160
65
99
162
162
100
90
186
101
186
102
44
186
162
100
99
101
162
186
102
87
186
160
80
186
103