Broîl Kîng®

ROYAL 320
9415-52
9415-53
9415-56

Onward Manufacturing Company Limited
Since 1906
585 Kumpf Drive
Waterloo, Ontario, Canada
N2V 1K3

10084-E27EU REV C 10/15

1

(2) 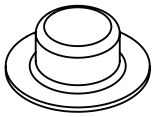 (2) 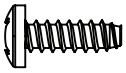 (1) 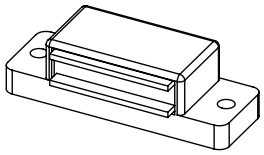

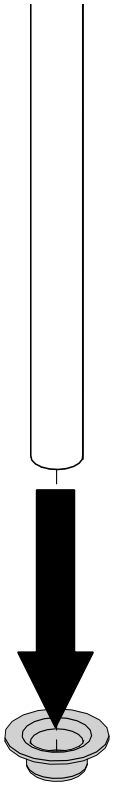

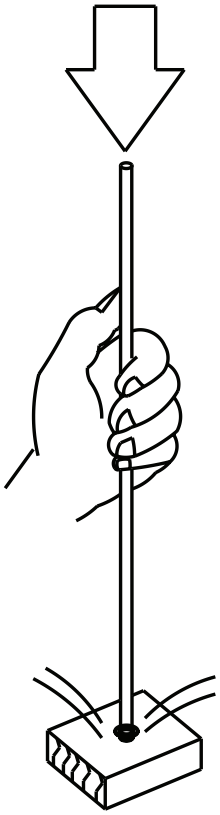

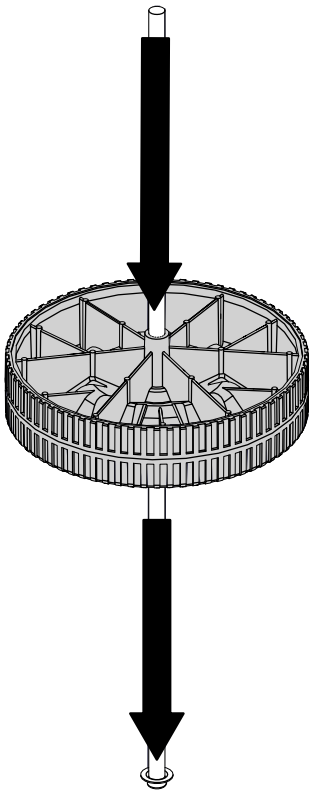

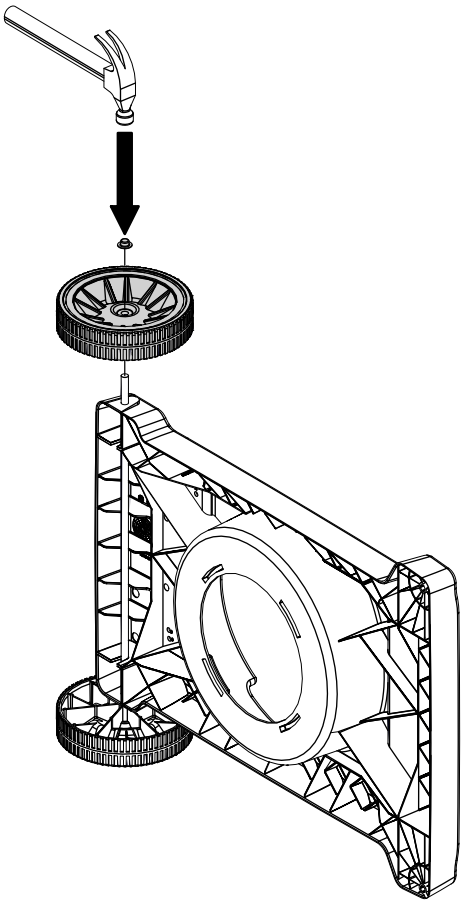

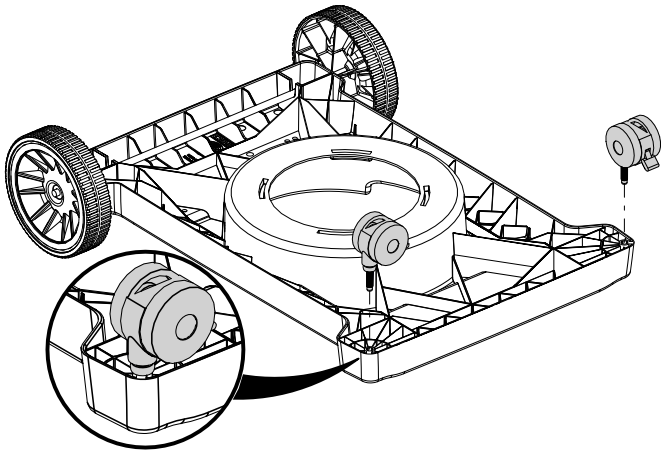

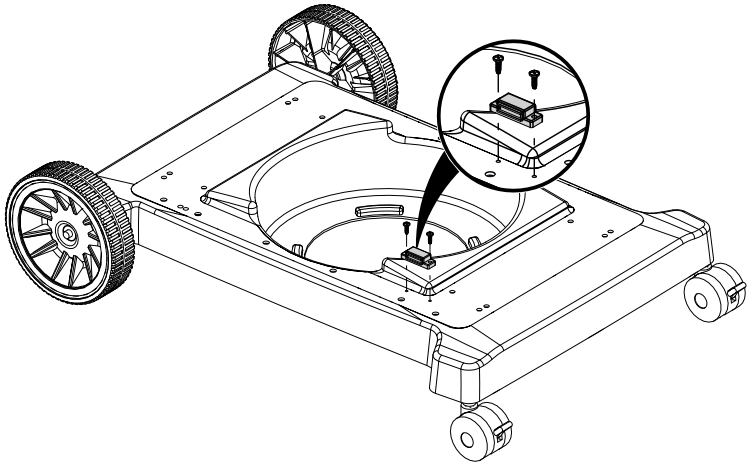

2

(2) 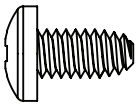 (1) 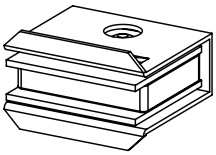 (1)

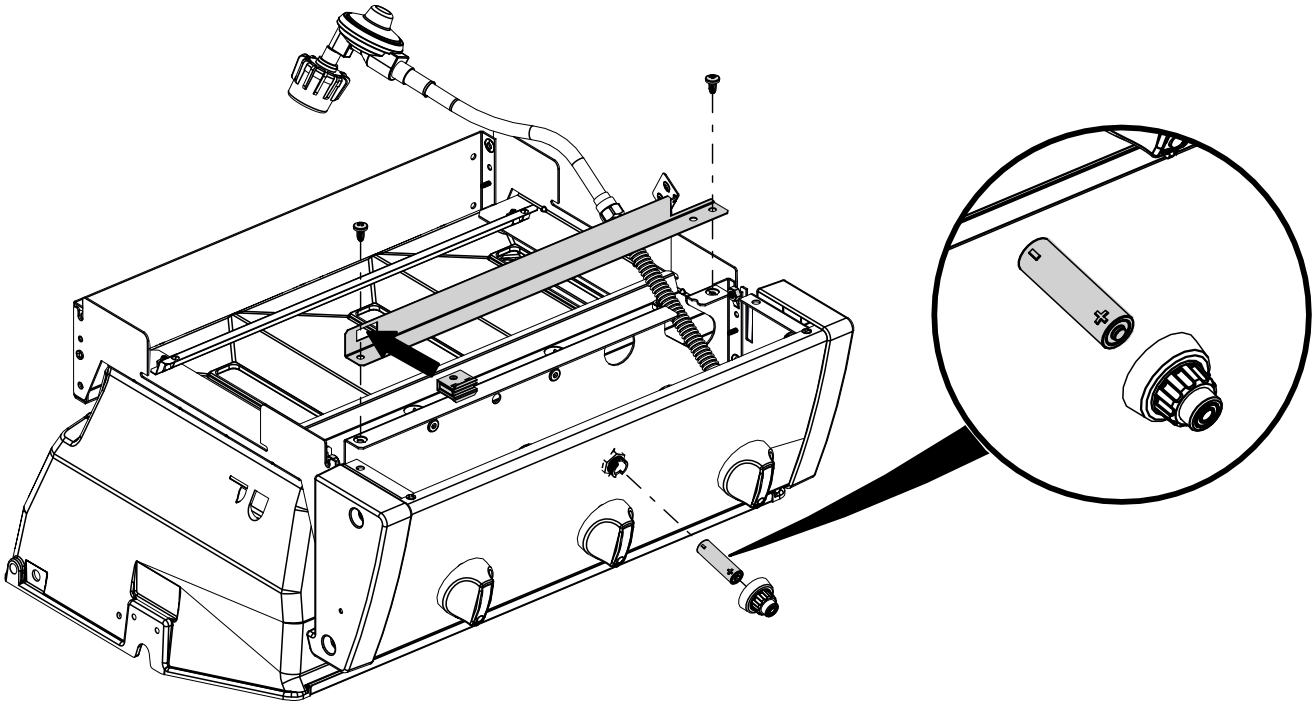

3

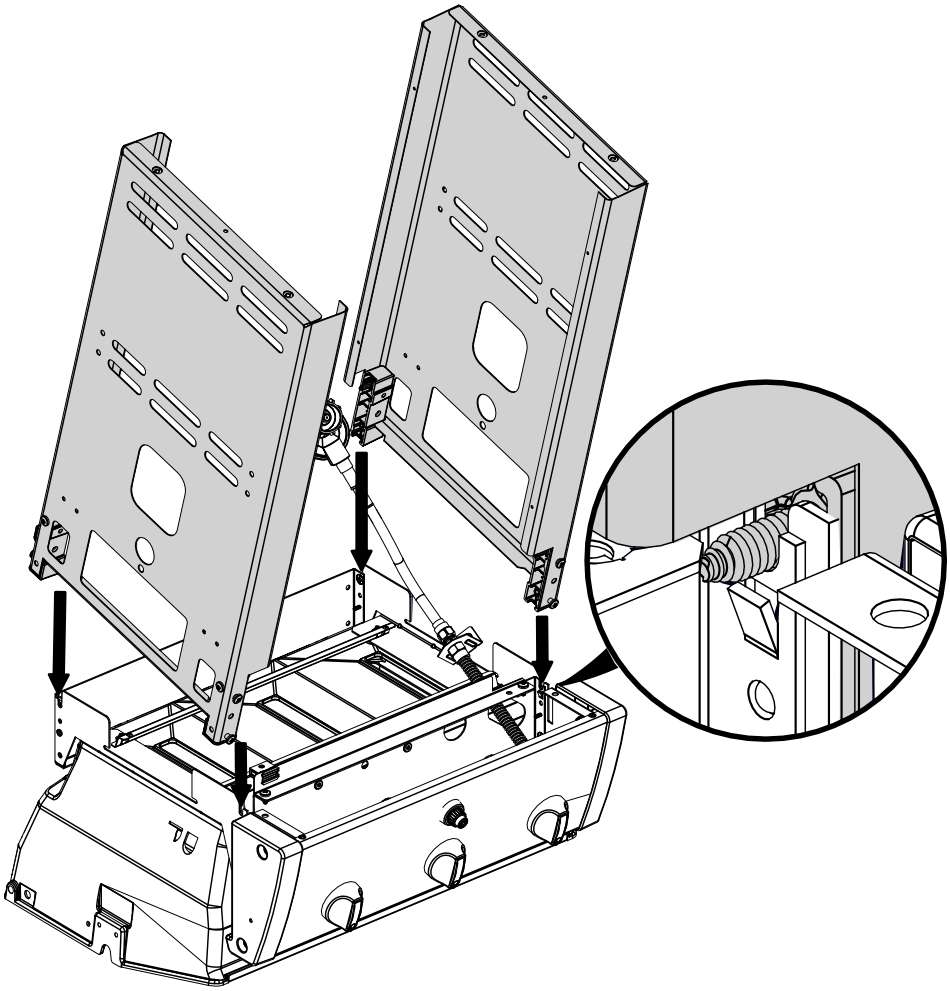

4	(4) 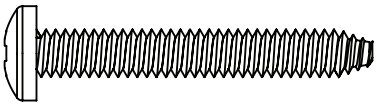 (2) 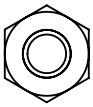

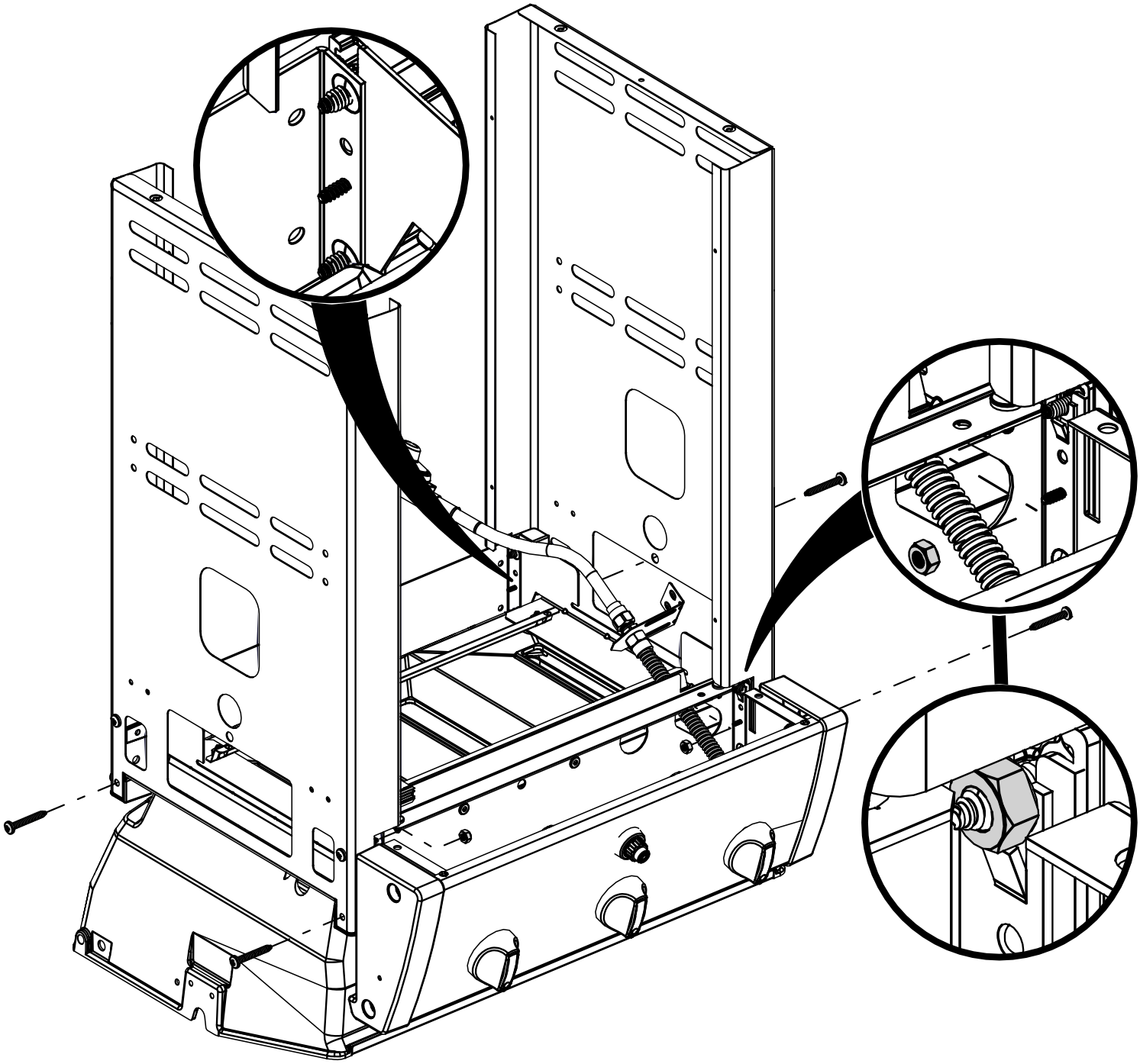

5	(2)

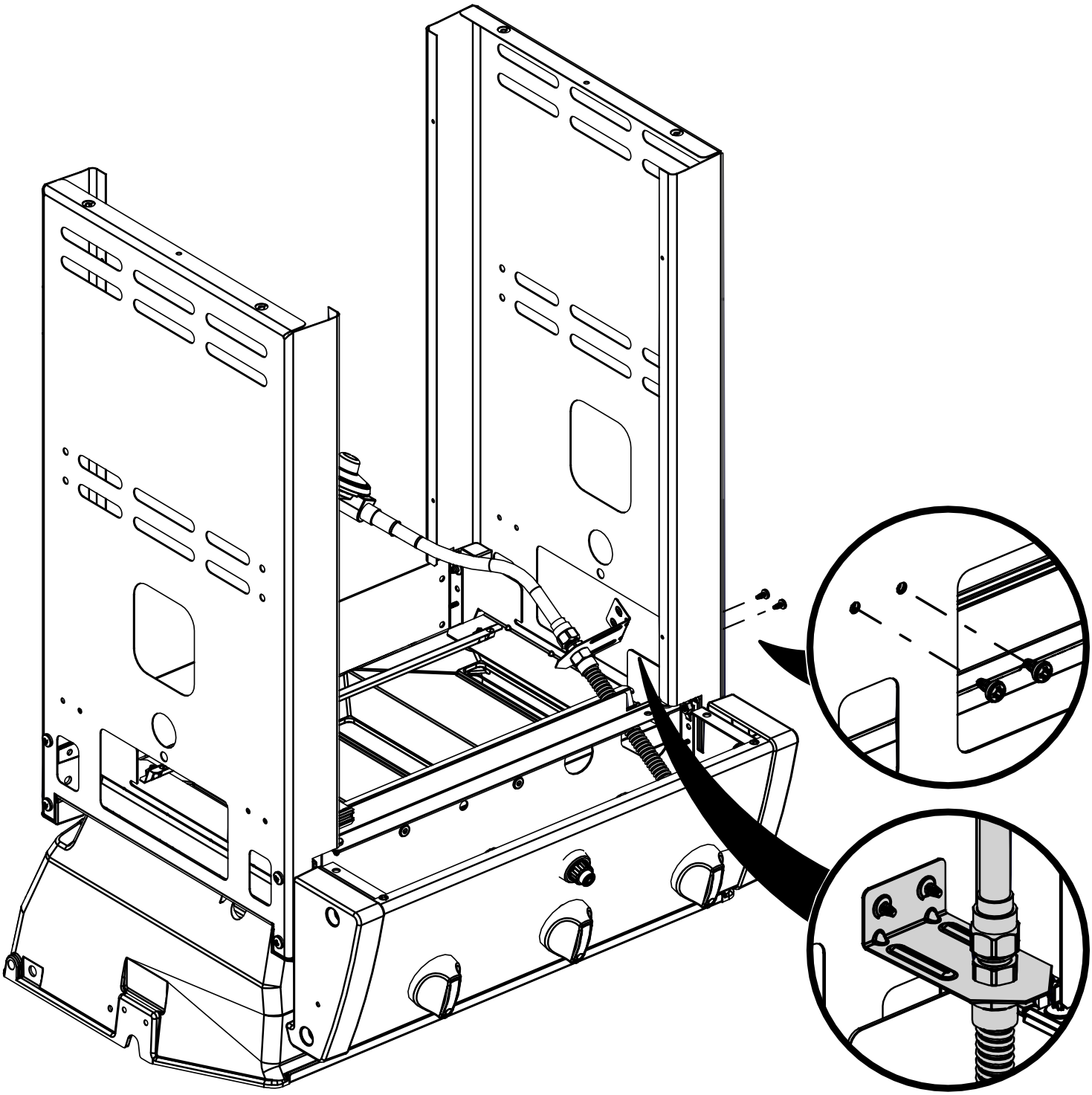

6	(4) 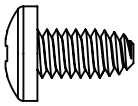

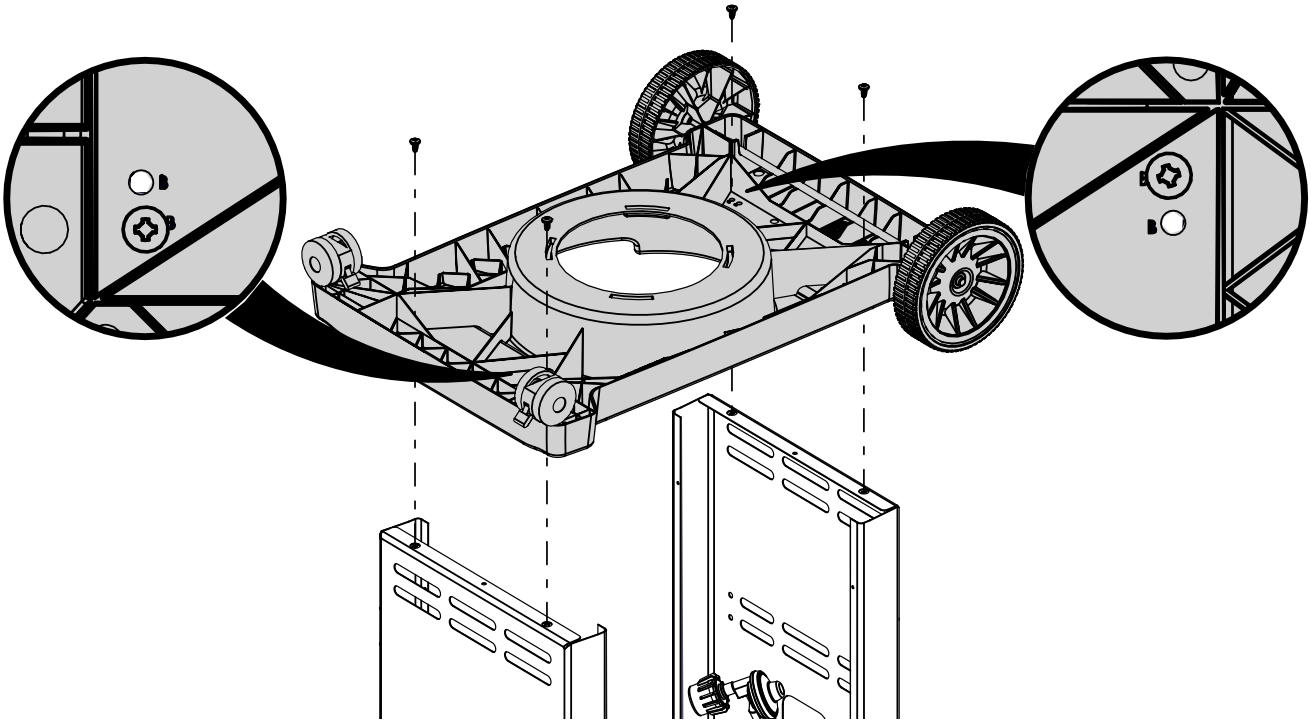

7	(2) 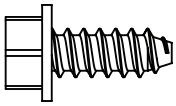

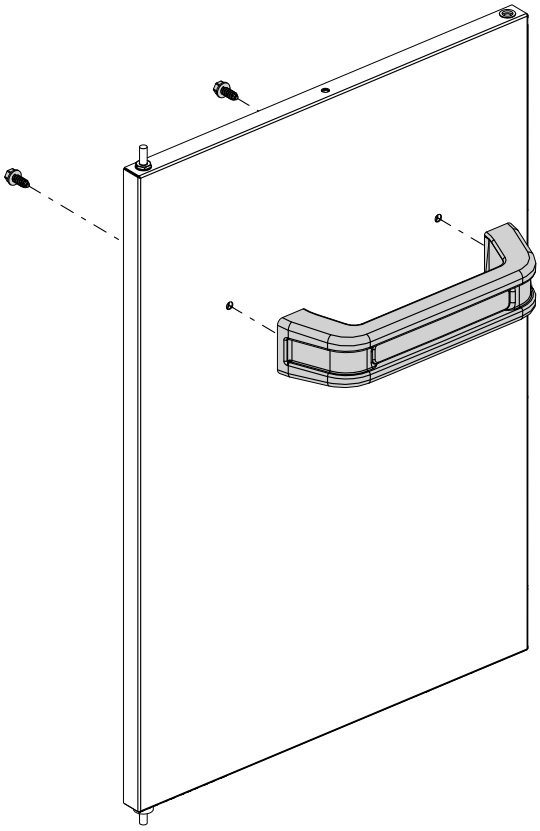

8	(1) 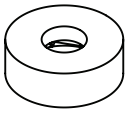

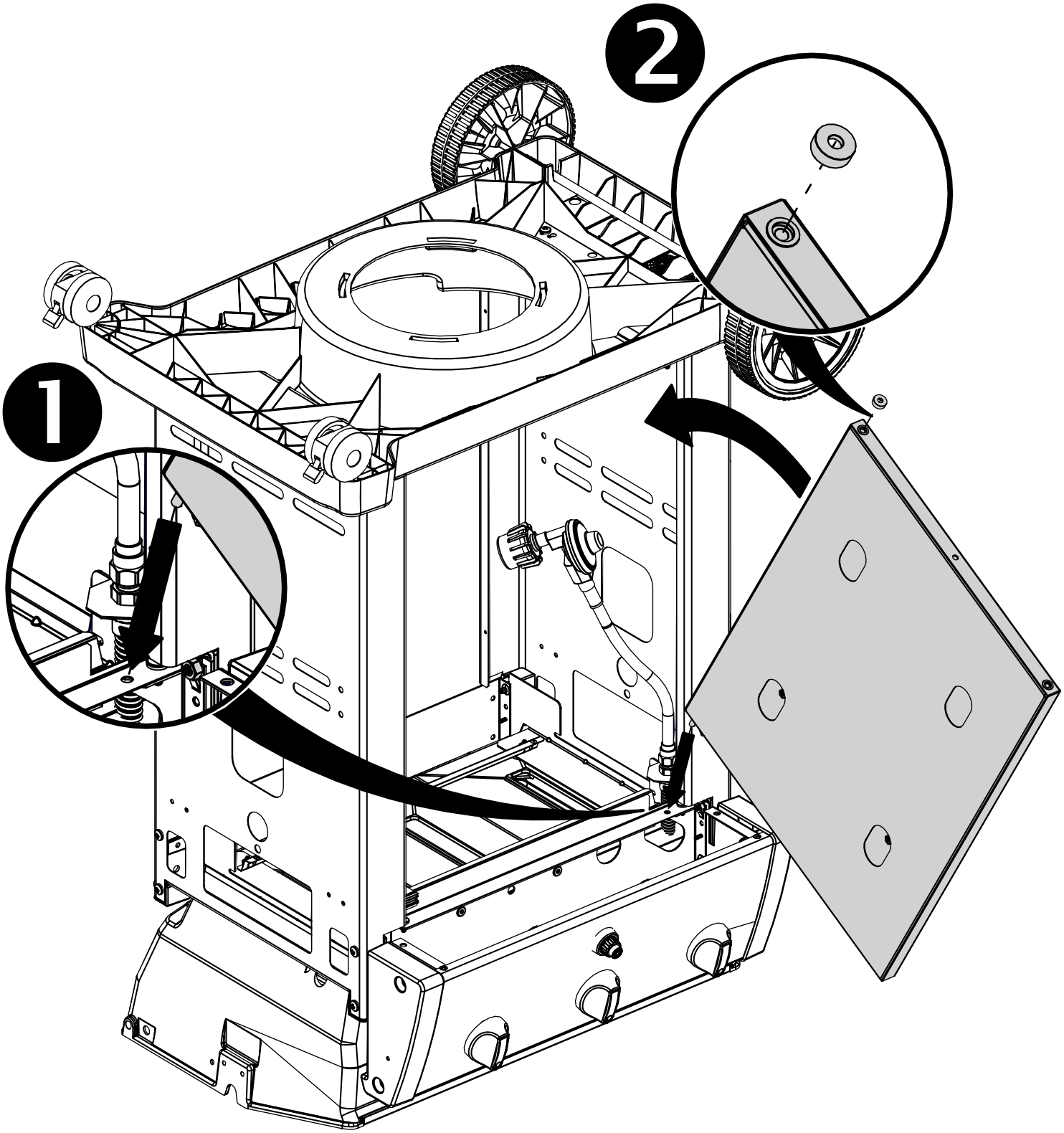

9	(1) 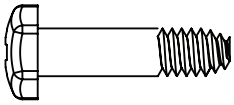

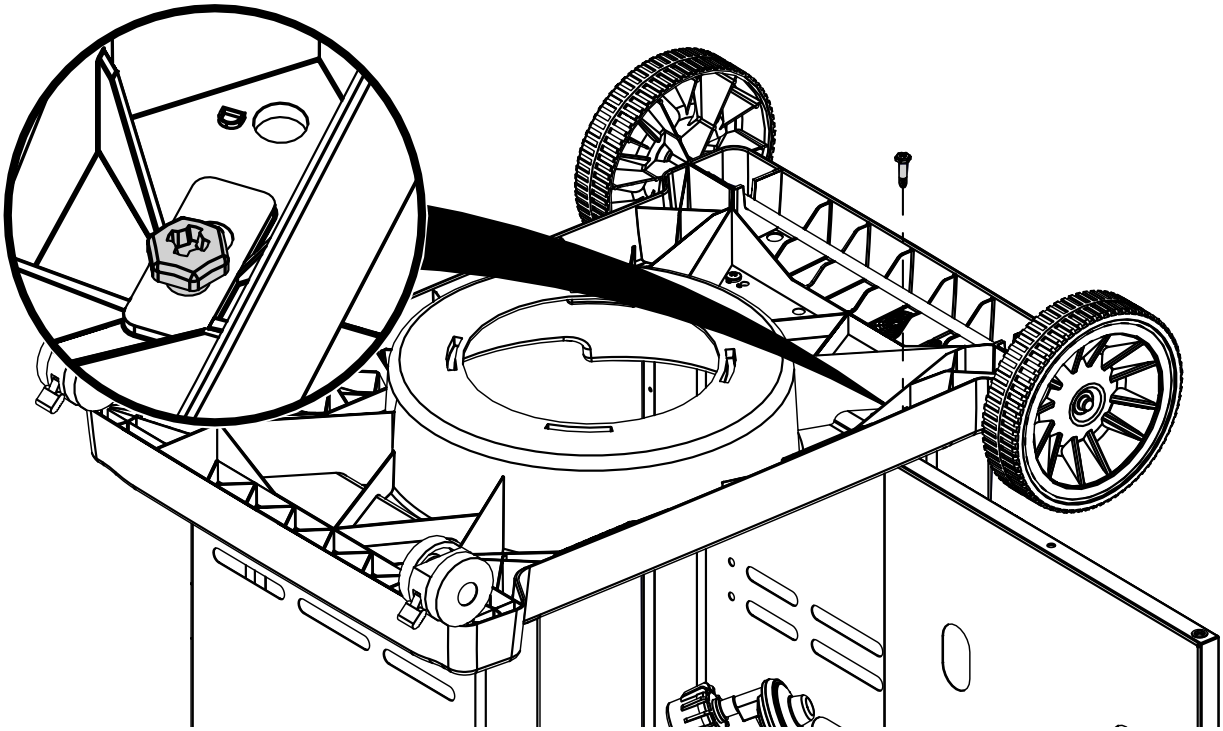

10	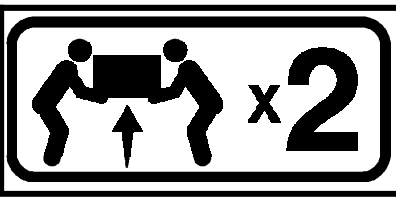

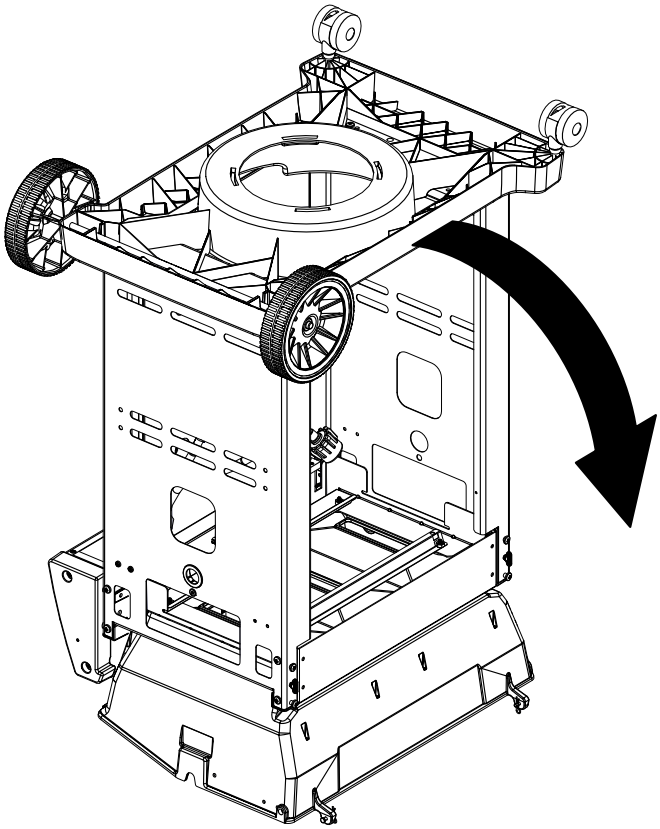

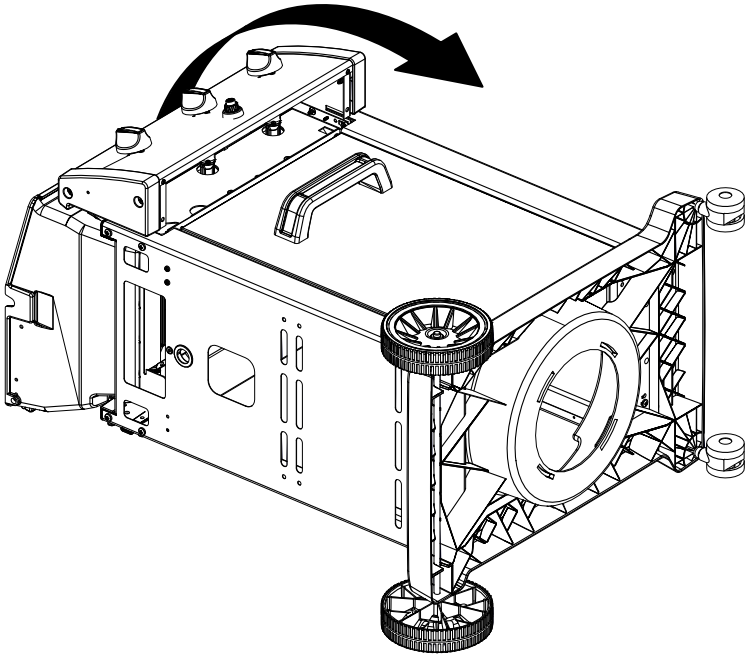

11	(2) 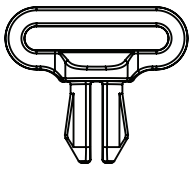

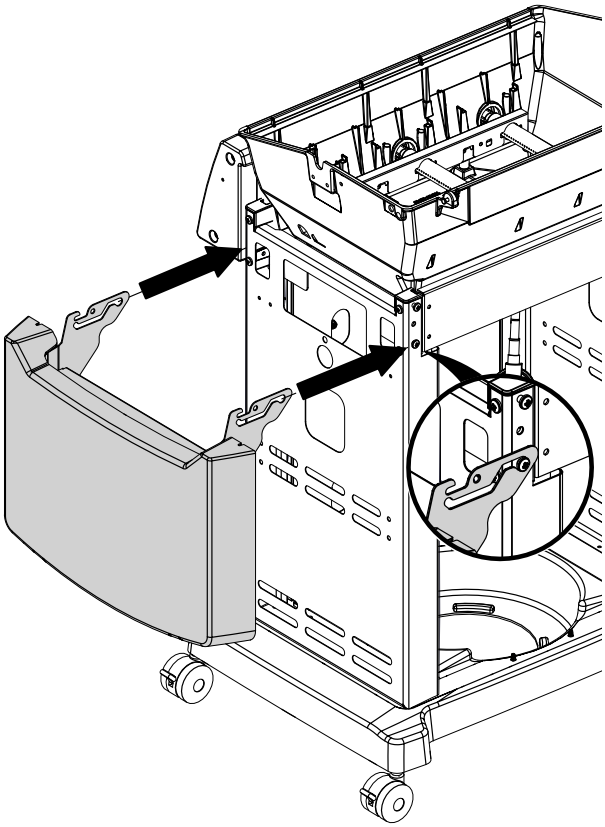

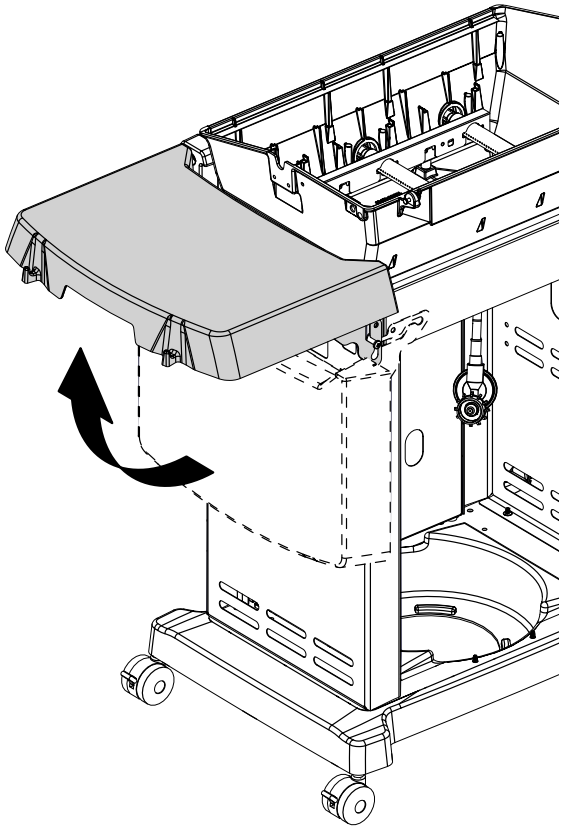

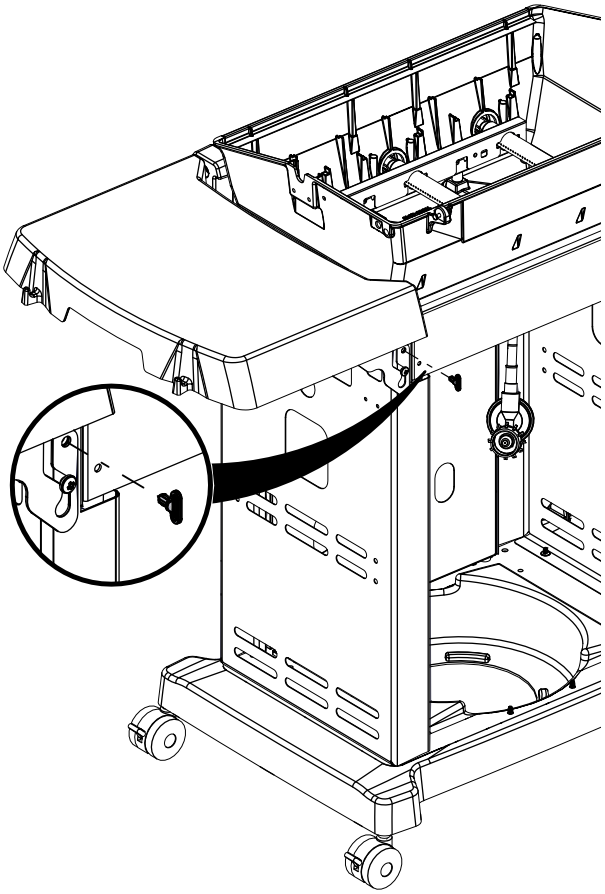

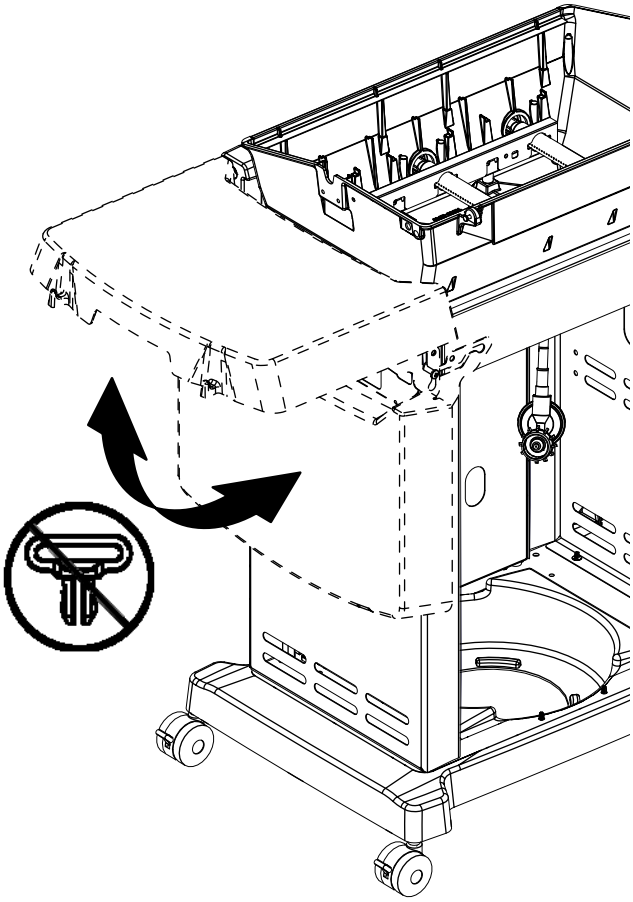

12

(2) 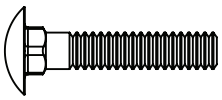 (2) (2) 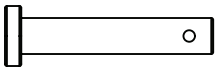 (2) 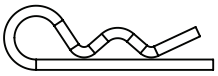

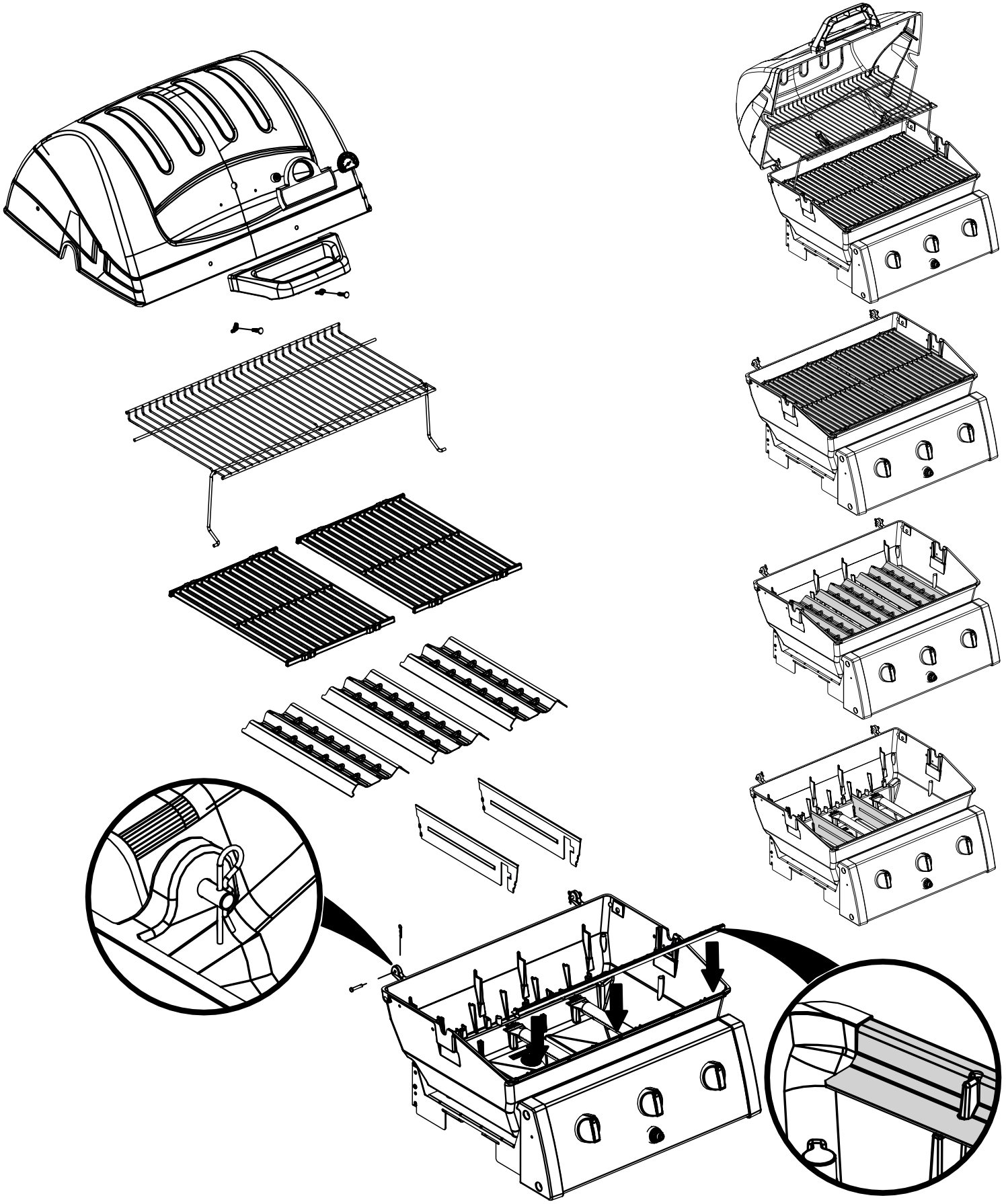

13	

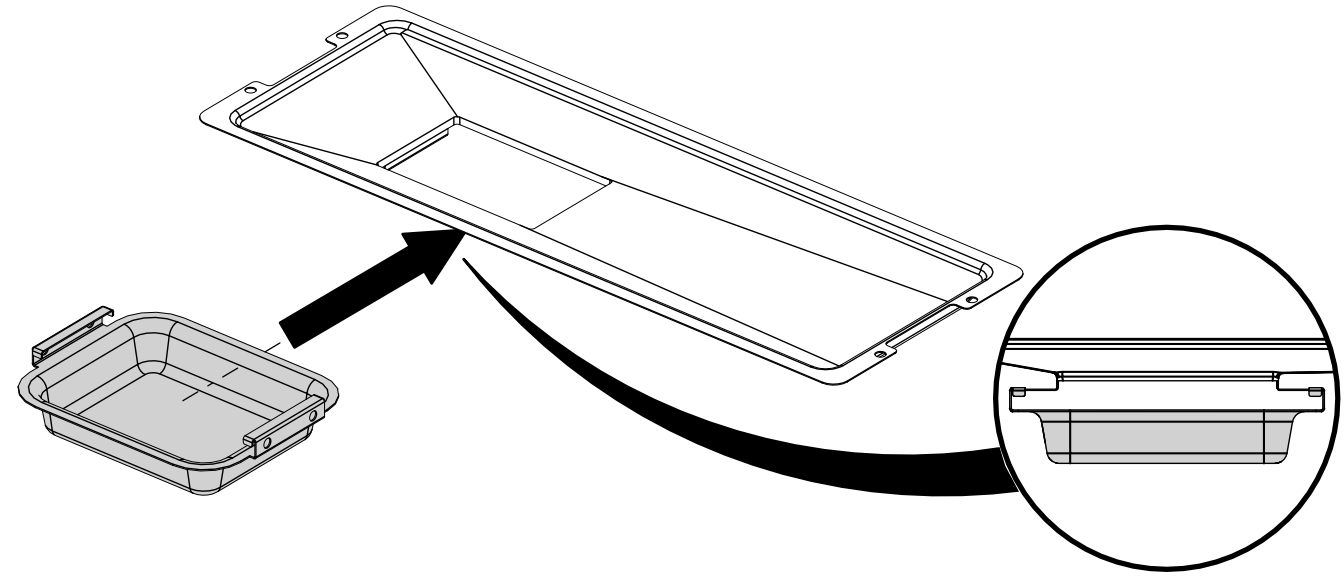

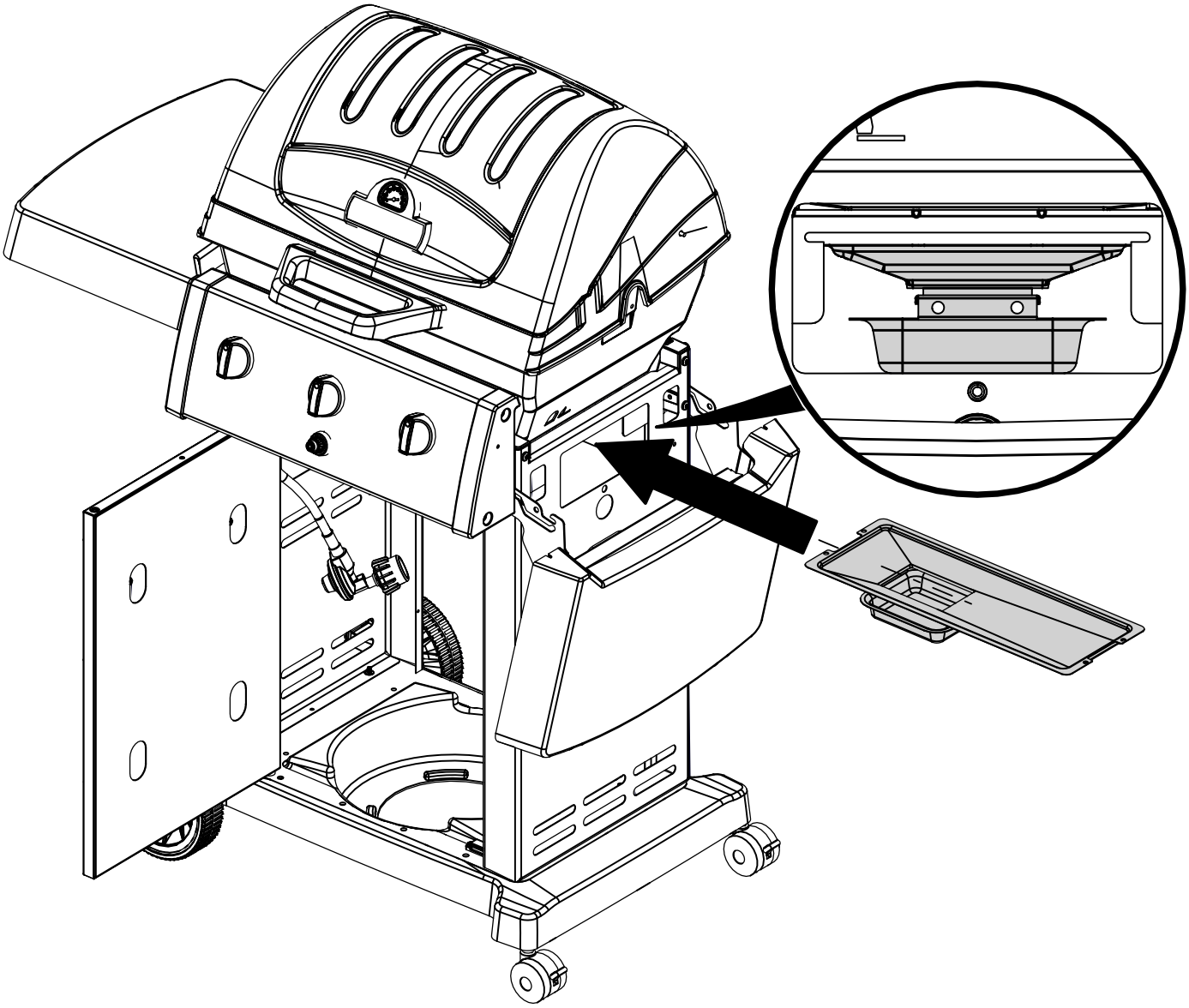

14	

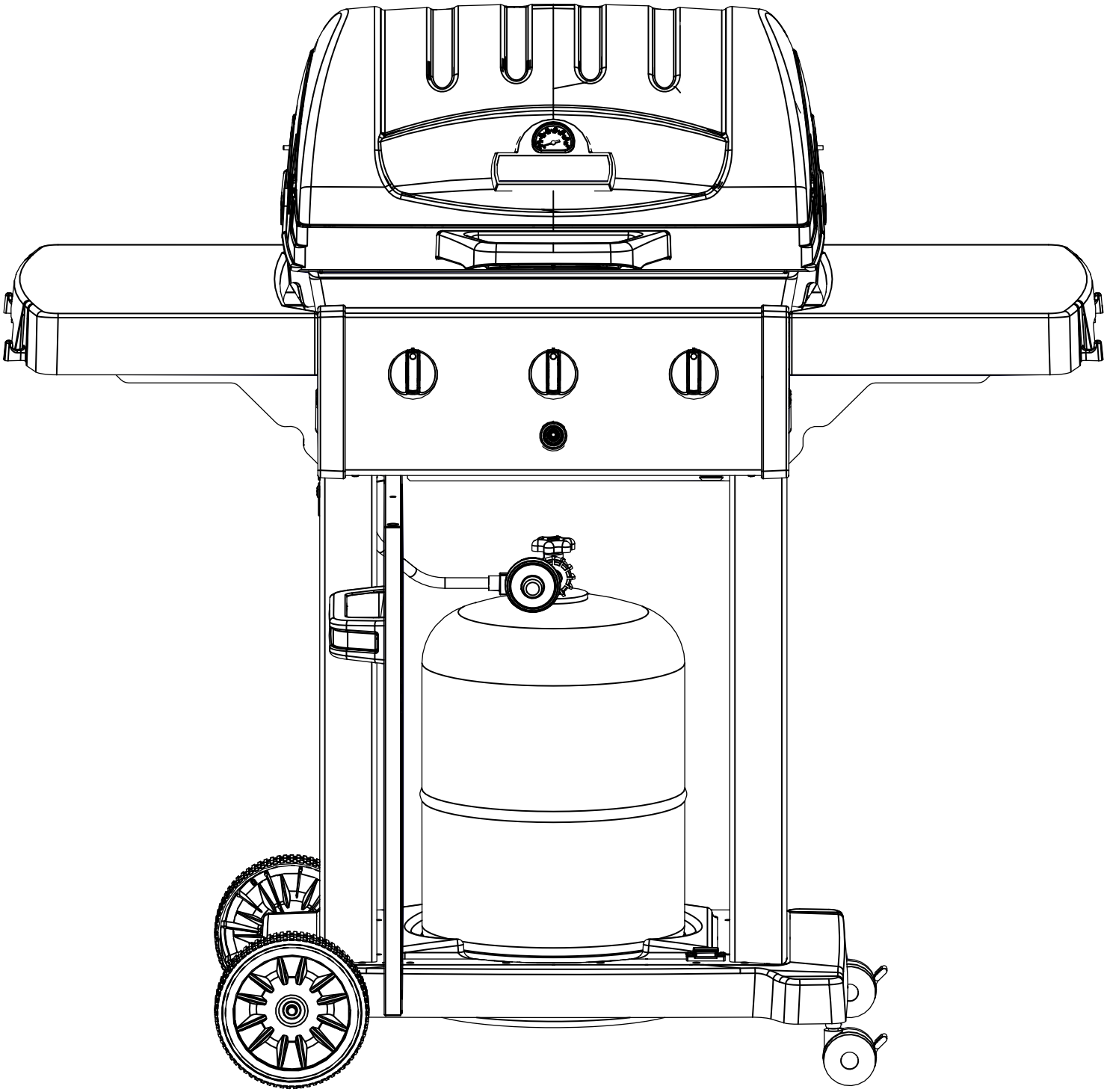

PARTS LIST / LISTE DES PIECES

KEY #	ITEM #	DESCRIPTION	9415-52	9415-53	9415-56
1	10909-E340	CASTING BOTTOM	1	1	1
2	34110328	CASTING TOP	1	1	1
3	10081-BK50	NAMEPLATE	1	1	1
4	S21061	WING NUT - 10-24	2	2	2
5	10571-5	HEAT INDICATOR	1	1	1
6	32300112	HINGE PIN	2	2	2
7	S21233	HITCH PIN CLIP	5	5	5
8	Y-11542	SCREW - BURNER	3	3	3
9	10225-T340	GRID - PORCELAIN	2	2	2
10	10222-E400	FLAV-R-WAVE	3	3	3
11	38110172	GRID - WARMING RACK	1	1	1
12	10222-E301	DIVIDER	2	2	2
13	10184-R83	BOSS EXTENSION	1	1	1
15	52904-E400D	BURNER	1	•	•
	52904-E400E	BURNER	•	1	1
17	10342-245	ELECTRONIC IGNITOR	1	1	1
18	10342-E12	ELECTRODE	2	2	2
19	52224-024A	COLLECTOR BOX	1	1	1
20	10111-16A	HOSE ASSEMBLY	1	1	1
21	29004-012	CONTROL ASSEMBLY	1	•	•
	29004-013	CONTROL ASSEMBLY	•	1	•
	29004-016	CONTROL ASSEMBLY	•	•	1
23	10473-K431	CONTROL KNOB	3	3	3
30	10194-F137	CONTROL COVER	1	1	1
31	10711-E34	EDGE CAP - CONTROL COVER	1	1	1
32	10711-E33	EDGE CAP - CONTROL COVER	1	1	1
33	10184-E96	RADIATION SHIELD	1	1	1
34	10184-E97	GREASE RAIL	1	1	1
35	10184-E501	SUPPORT-CASTING-LEFT	1	1	1
36	10184-E511	SUPPORT-CASTING-RIGHT	1	1	1
37	10184-E531	SUPPORT-SIDE SHELF-LEFT	2	2	2
37A	10184-E63	SUPPORT-SIDE SHELF-LEFT	2	2	2
38	10184-E521	SUPPORT-SIDE SHELF-RIGHT	2	2	2
38A	10184-E62	SUPPORT-SIDE SHELF-RIGHT	2	2	2
39	10956-E421	BRACE-REAR	1	1	1
40	10958-E71	BASE	1	1	1
41	10956-E311	BRACE-FRONT	1	1	1
43	10958-E761	SIDE PANEL	2	2	2
45	10184-E981	BRACKET - DOOR CATCH	1	1	1
48	10184-E691	SHELF BRACKET	2	2	2
50	10711-F55	SHELF - SIDE	2	2	2
56	10892-7G	WHEEL	2	2	2
69	10958-E48A	DOOR	1	1	1
70	21475-138	HANDLE	1	1	1
72	S21420	PUSH NUT	2	2	2
74	S21084	SCREW - #14 x 3/4	14	14	14
75	30230228	HANDLE	1	1	1
78	10892-13	CASTOR	2	2	2
79	Y-11561	BOLT – 1/4:20 x 1 3/4	12	12	12
80	Y-11546	SCREW - SHOULDER	8	8	8
81	Y-12860	SCREW – 1/4-20 X 1 3/8	4	4	4
82	Y-12673	SHELF - LOCK PIN	2	2	2
84	S15170	AXLE	1	1	1
85	Y-12865	SCREW - 1/4-20 X 3/4	6	6	6
86	Y-11545	SCREW - 1/4-20 X 1-3/8	4	4	4
87	Y-11793	NUT- 1/4-20	6	6	6
88	32500179	BOLT - 10-24 X 3/4	2	2	2
98	S21124	SCREW – 8 X 1/2	17	17	17
115	Y-29304	SCREW #10-24 X 3/8	2	2	2
122	57054-902	GREASE TRAY	1	1	1
123	52009-902	GREASE PAN	1	1	1
135	Y-12119	BUSHING	2	2	2
150	10240-14	DOOR PIN	1	1	1
152	Y-12222	MAGNET	1	1	1
153	Y-12223	SNAP IN MAGNET	1	1	1
164	Y-12124	DOOR PIN CAP	1	1	1
165	Y-11551	SCREW 1/4-20 X 1	1	1	1

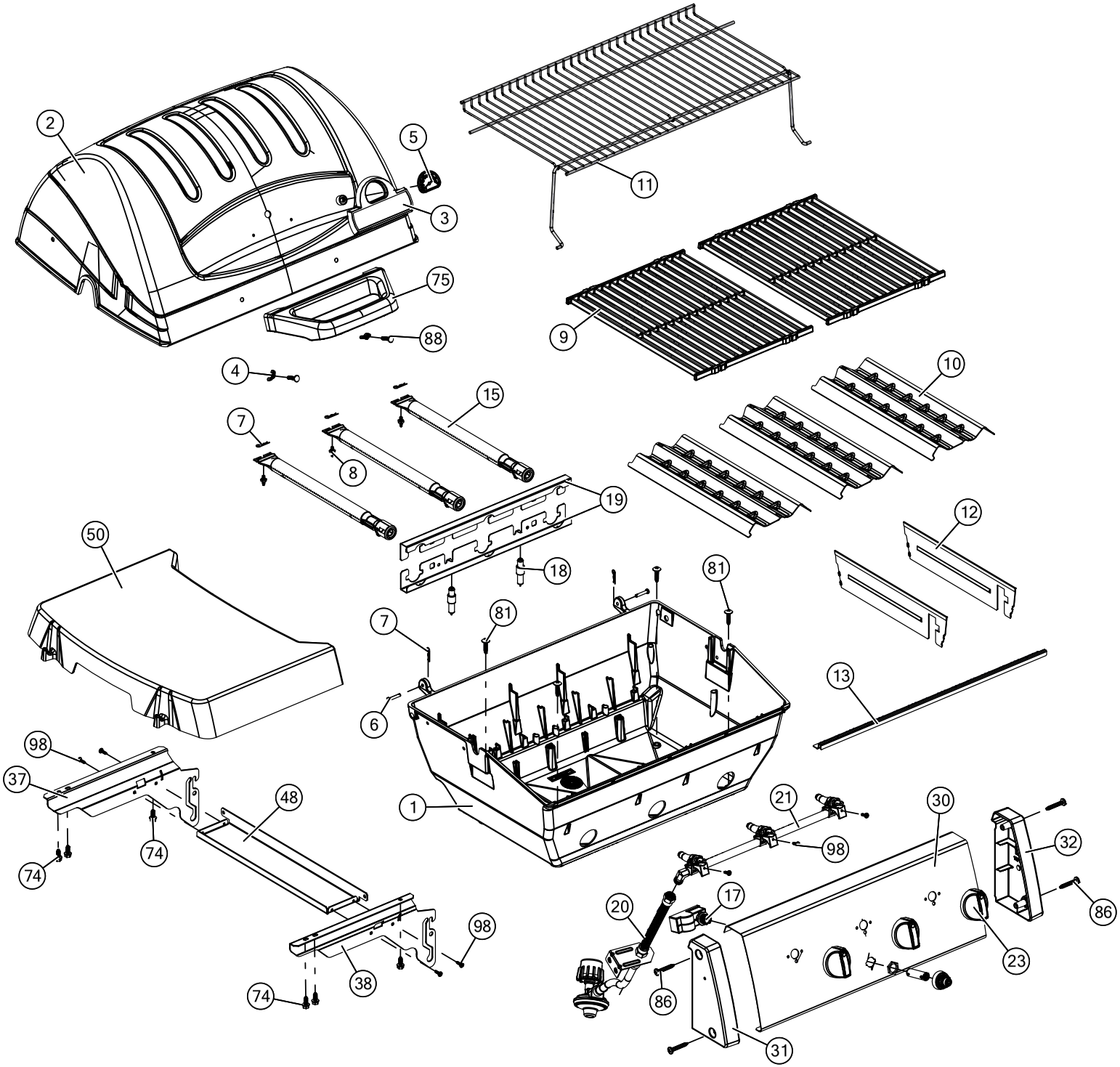
2
5
3
11
75
88
9
4
10
15
7
8
19
12
50
18
81
7
81
13
6
98
37
48
1
21
30
98
32
74
74
20
17
86
98
23
38
74
86
31

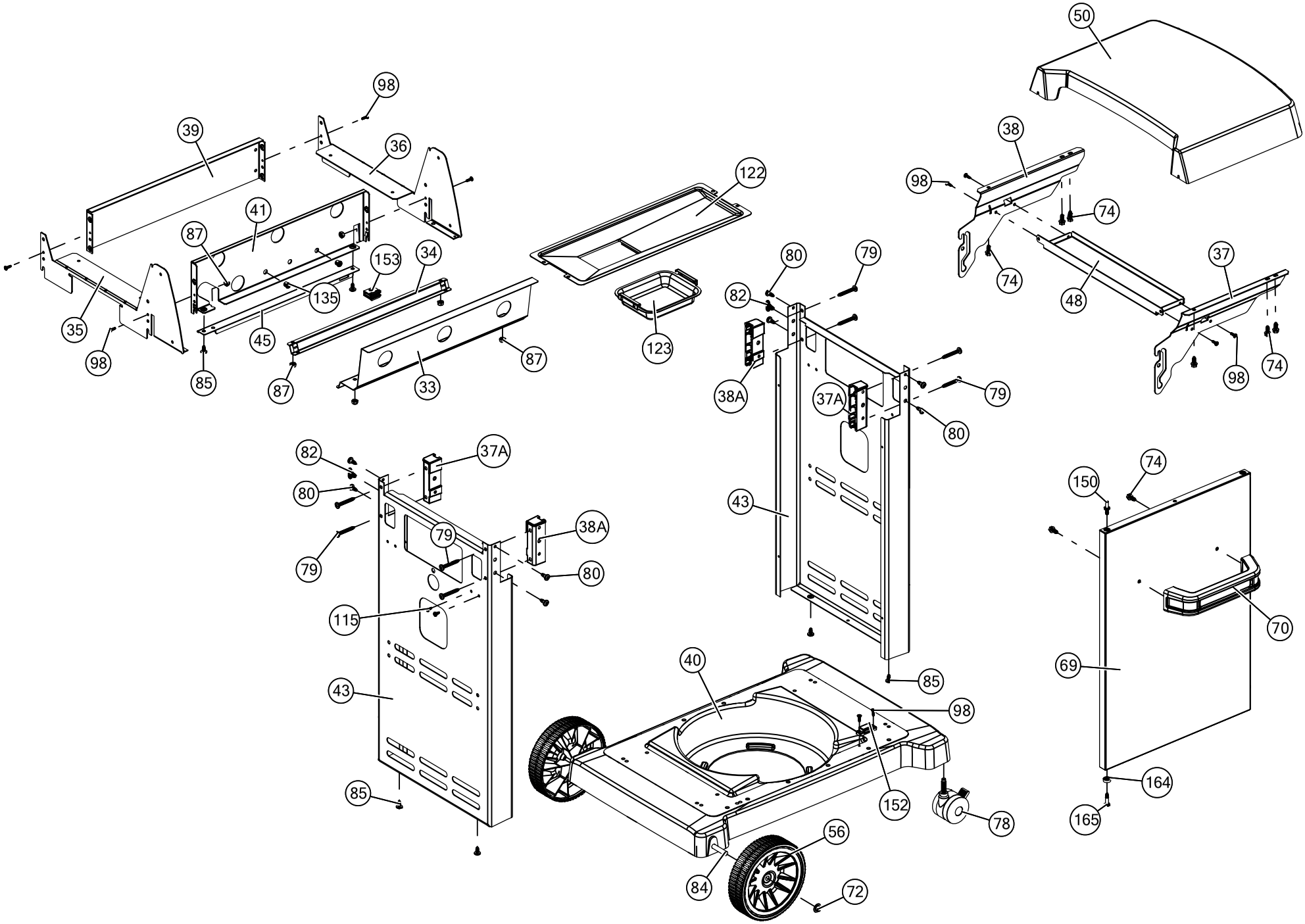
50
98
39
36
38
122
98
74
41
87
153
34
135
74
37
80
79
82
48
35
45
123
98
85
87
33
87
38A
37A
79
80
98
74
82
37A
80
74
150
43
79
38A
80
115
70
40
69
43
85
98
152
164
85
78
165
56
84
72