# Broîl Kîng®

## REDDI-BILT BARBECUES

Broîl Kîng®

IMPERIAL XL
9576-42
9576-43
9576-46
9576-82
9576-83
9576-86

Onward Manufacturing Company Limited
Since 1906
585 Kumpf Drive
Waterloo, Ontario, Canada
N2V 1K3

20084-E87EU REV D 03/14

| | |
|---|---|
| **1** | (28) 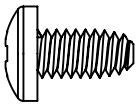 (4) 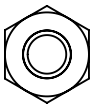 |

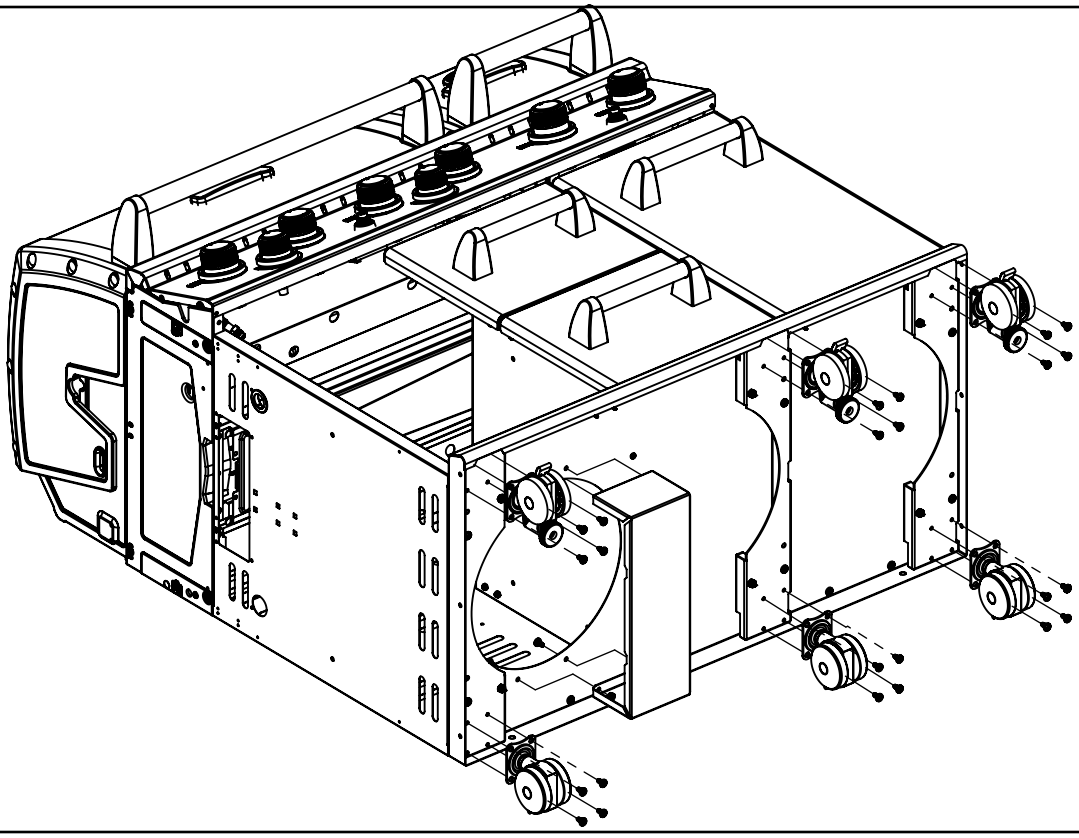

| | |
|---|---|
| **2** | 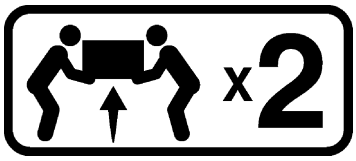  |

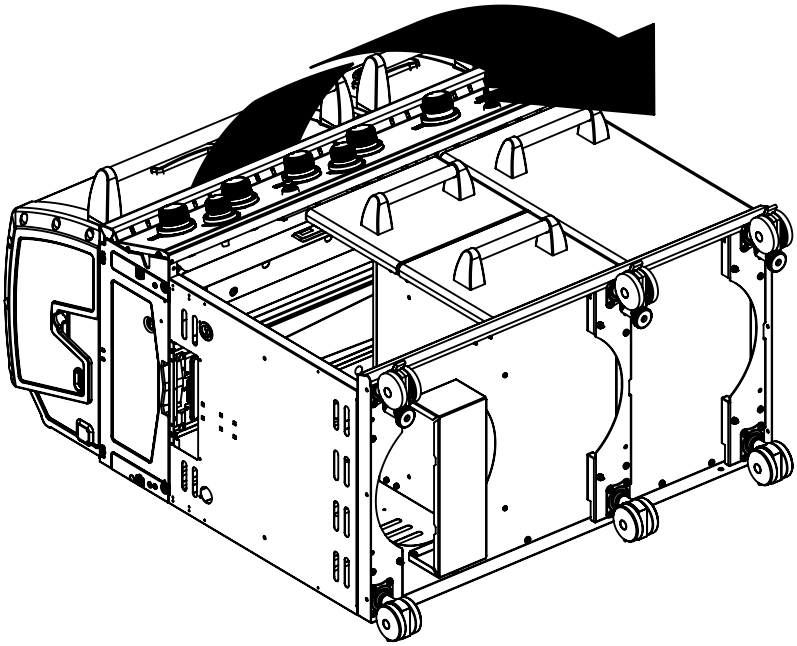

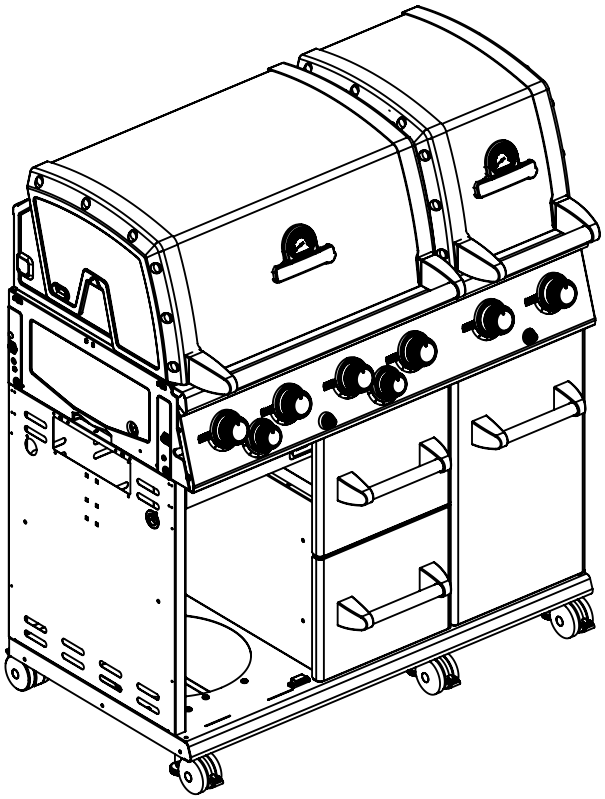

| | |
|---|---|
| **3** | |

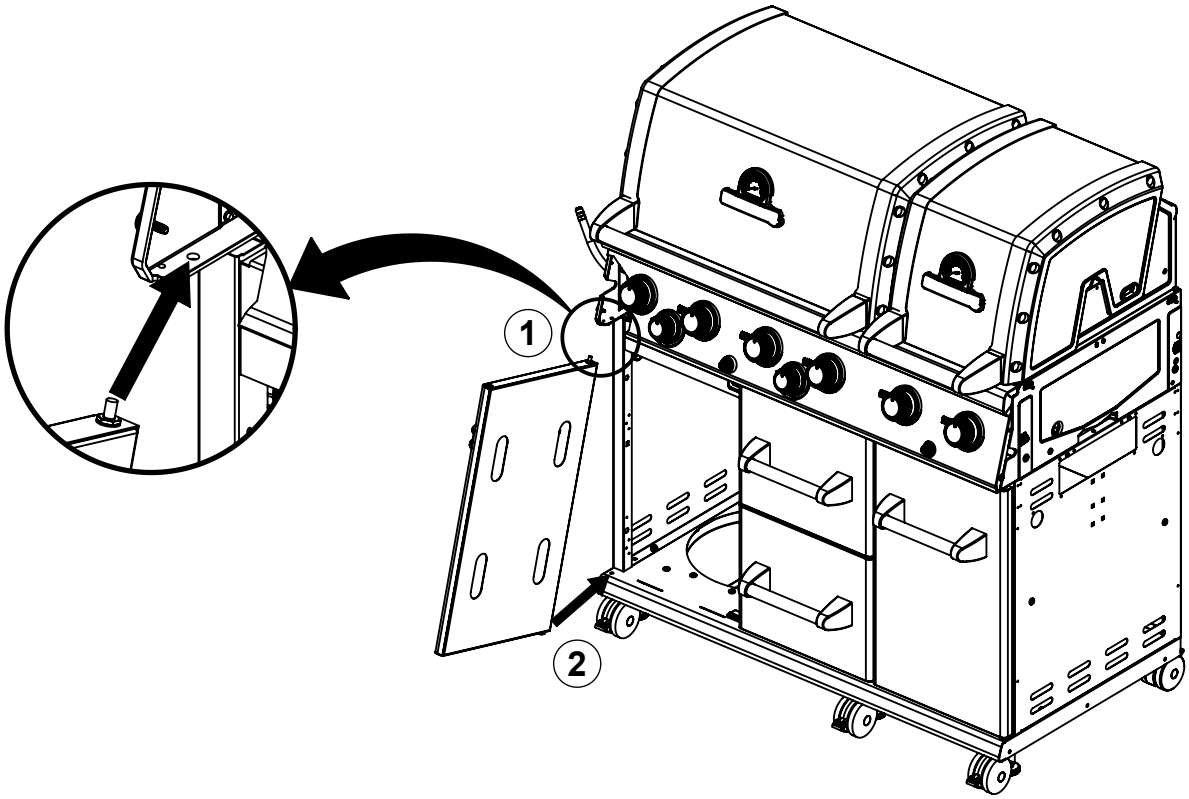


| | |
|---|---|
| **4** | (1) 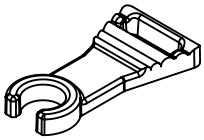 |

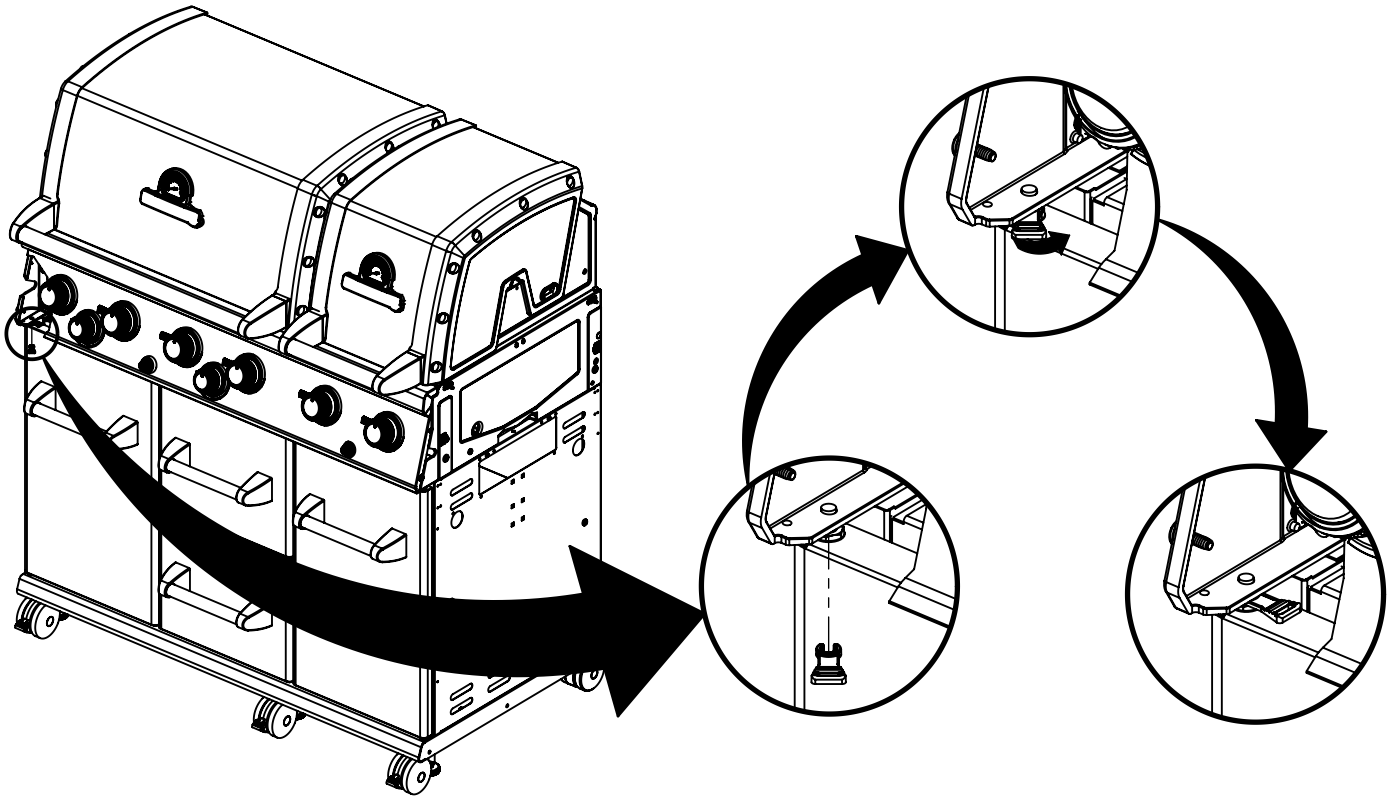

| | |
|---|---|
| **5** | (2) 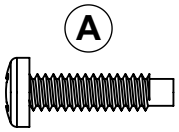 (2) 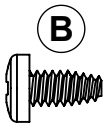 |

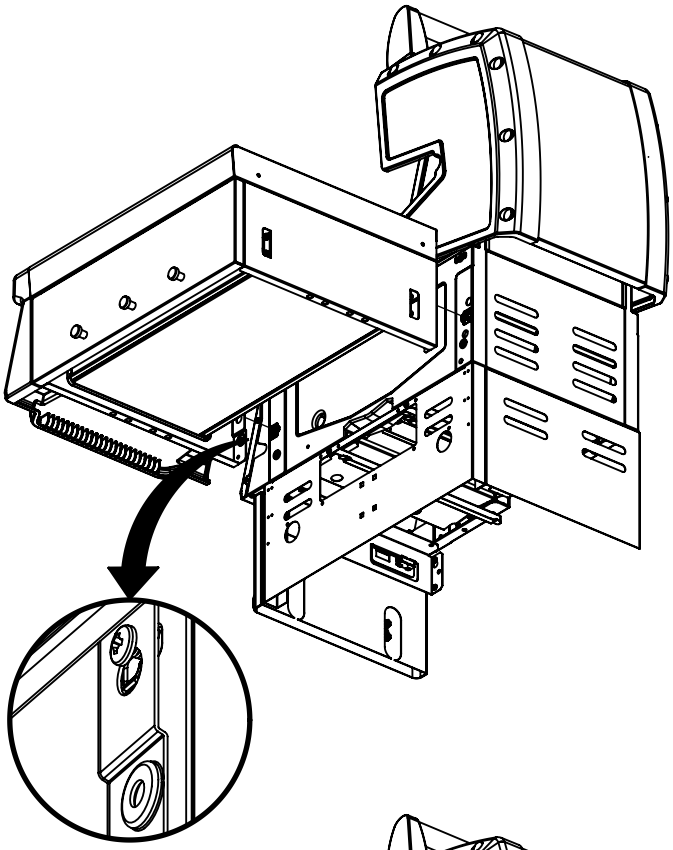

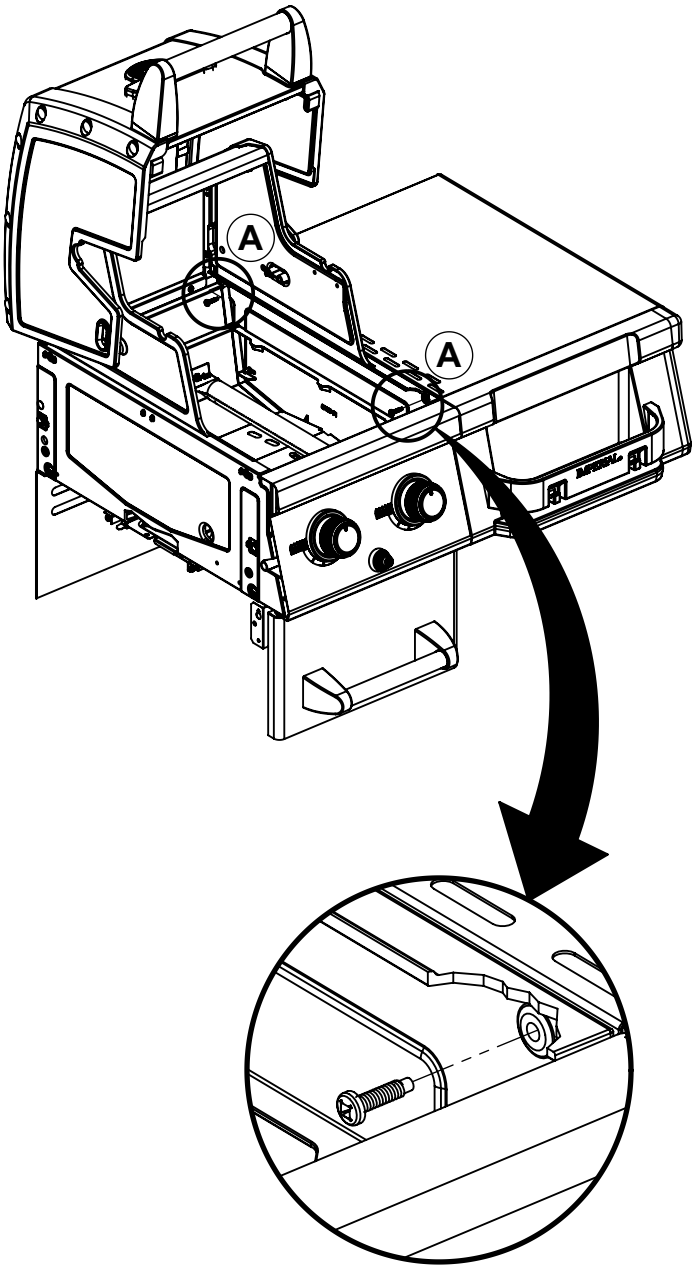


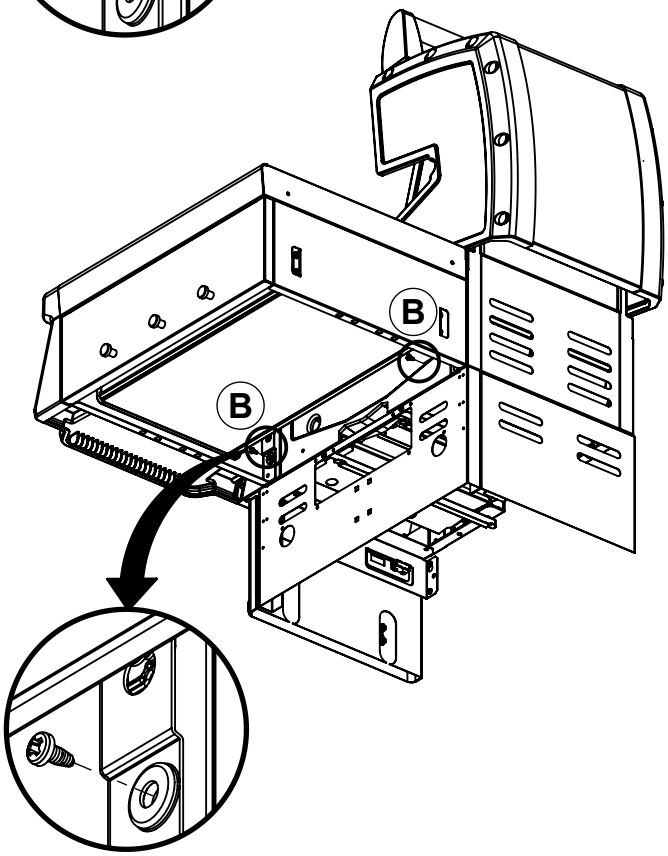

| | |
|---|---|
| **6** | (2) 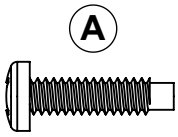  (2) 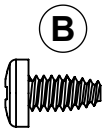  |

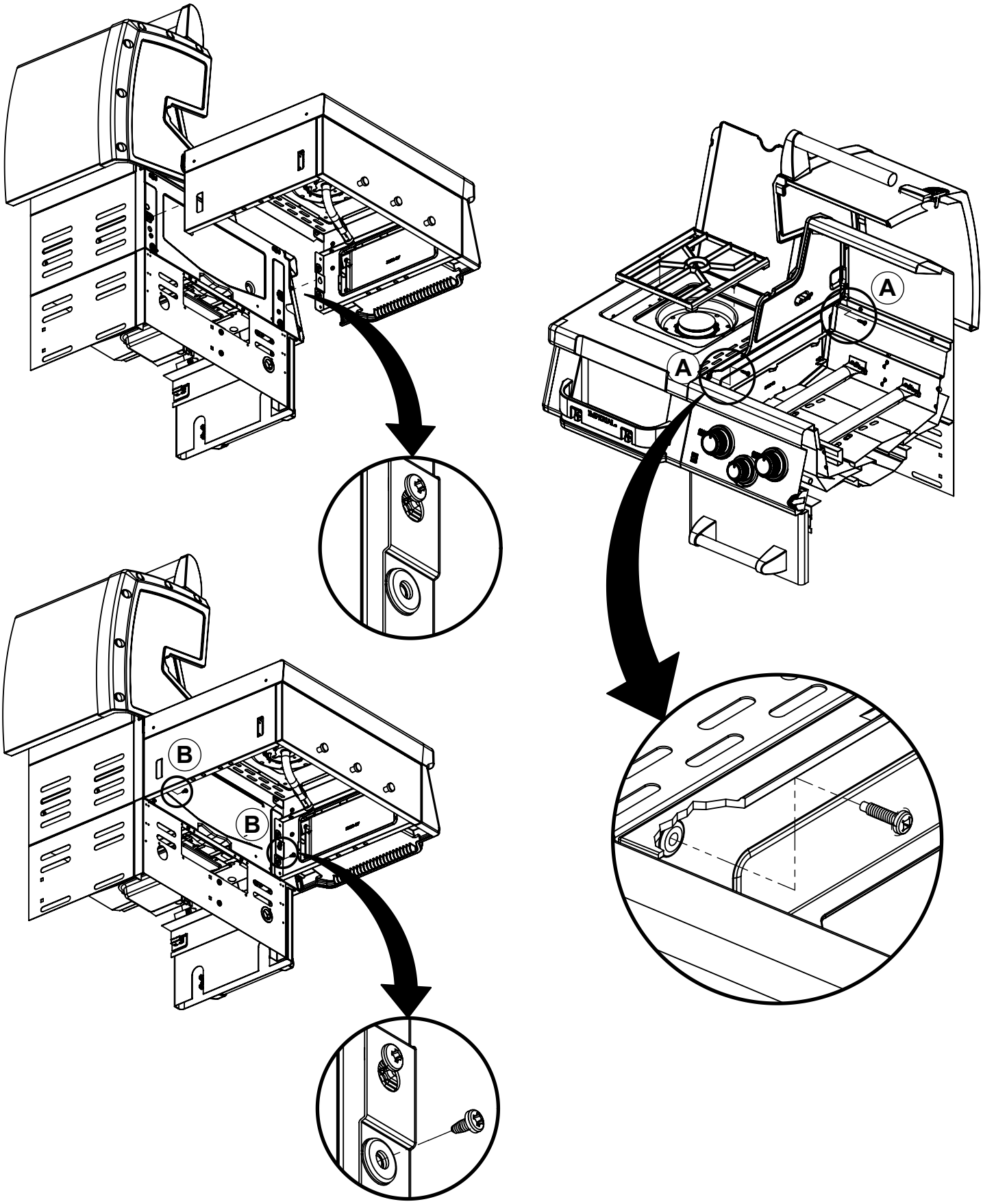

| | |
|---|---|
| **7** | (1) 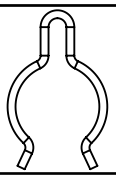 |

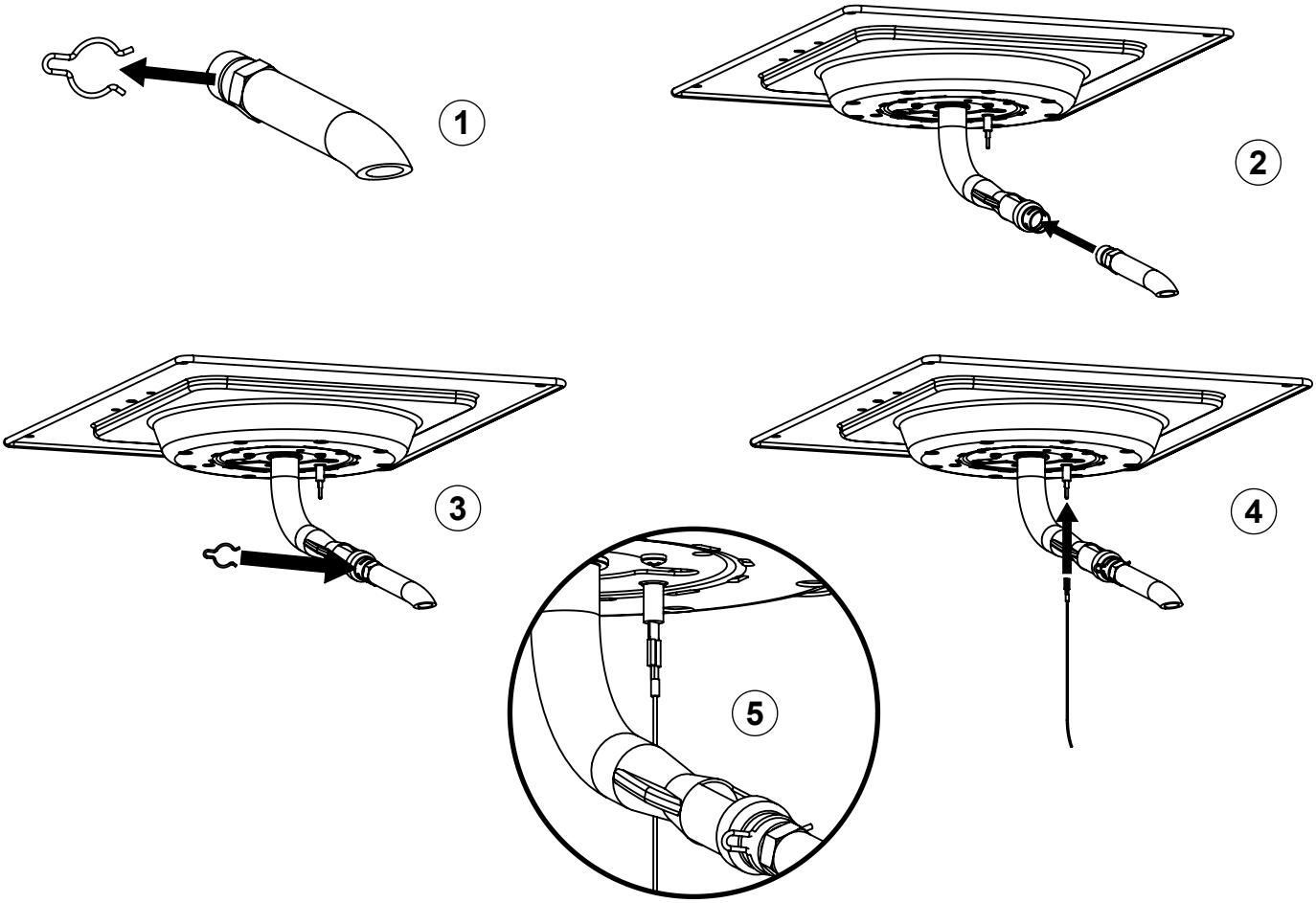


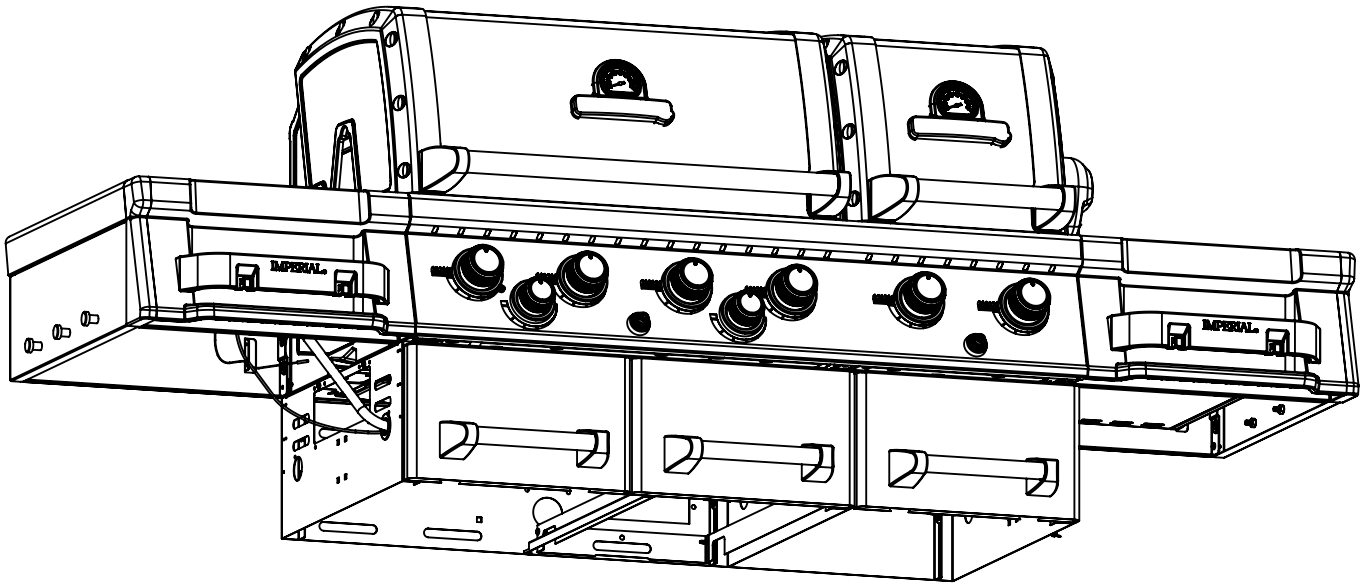

| 8 | |
|---|---|

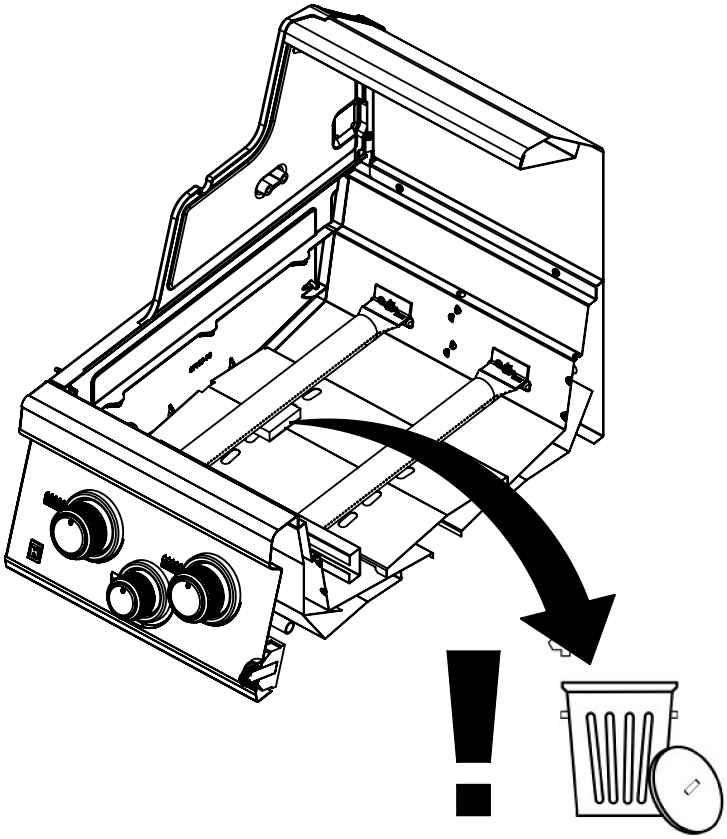

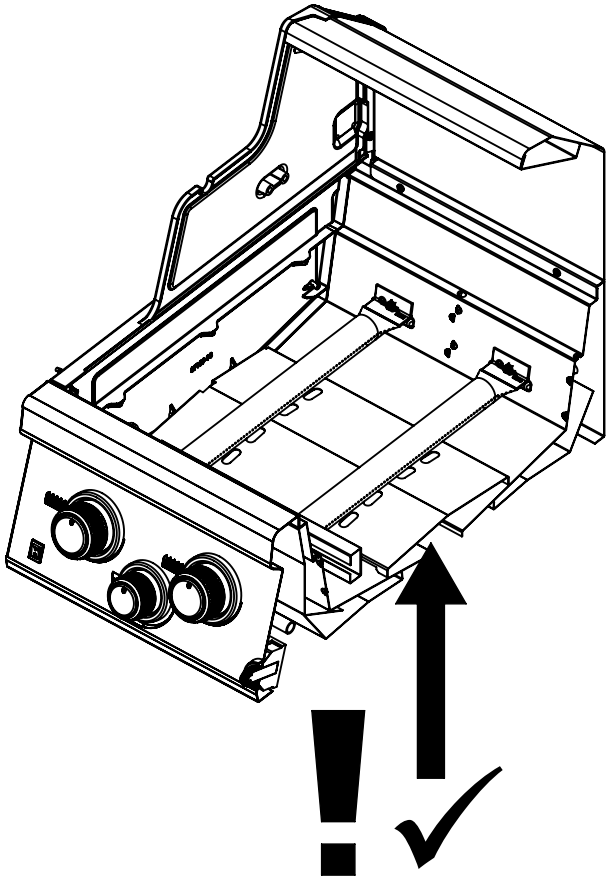

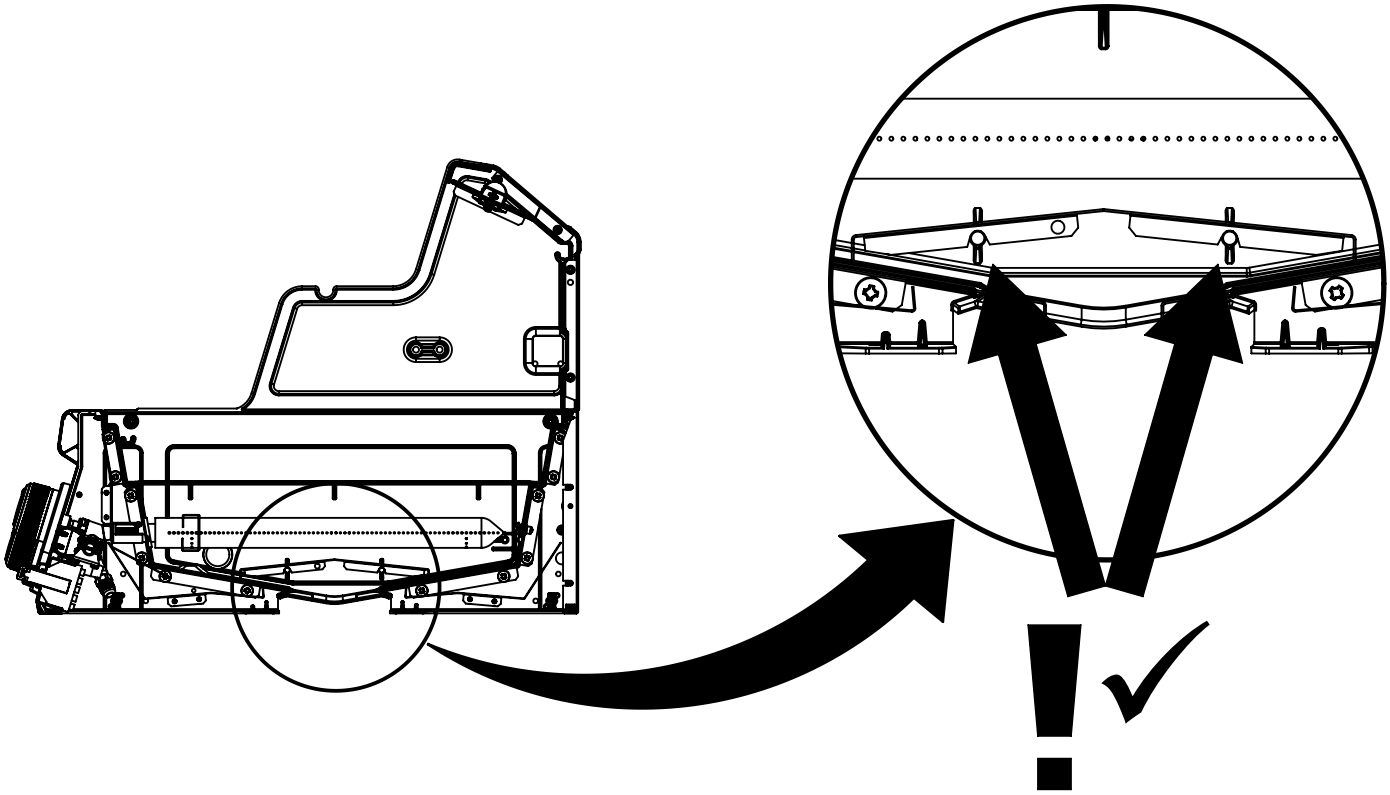

| 9 | |
|---|---|

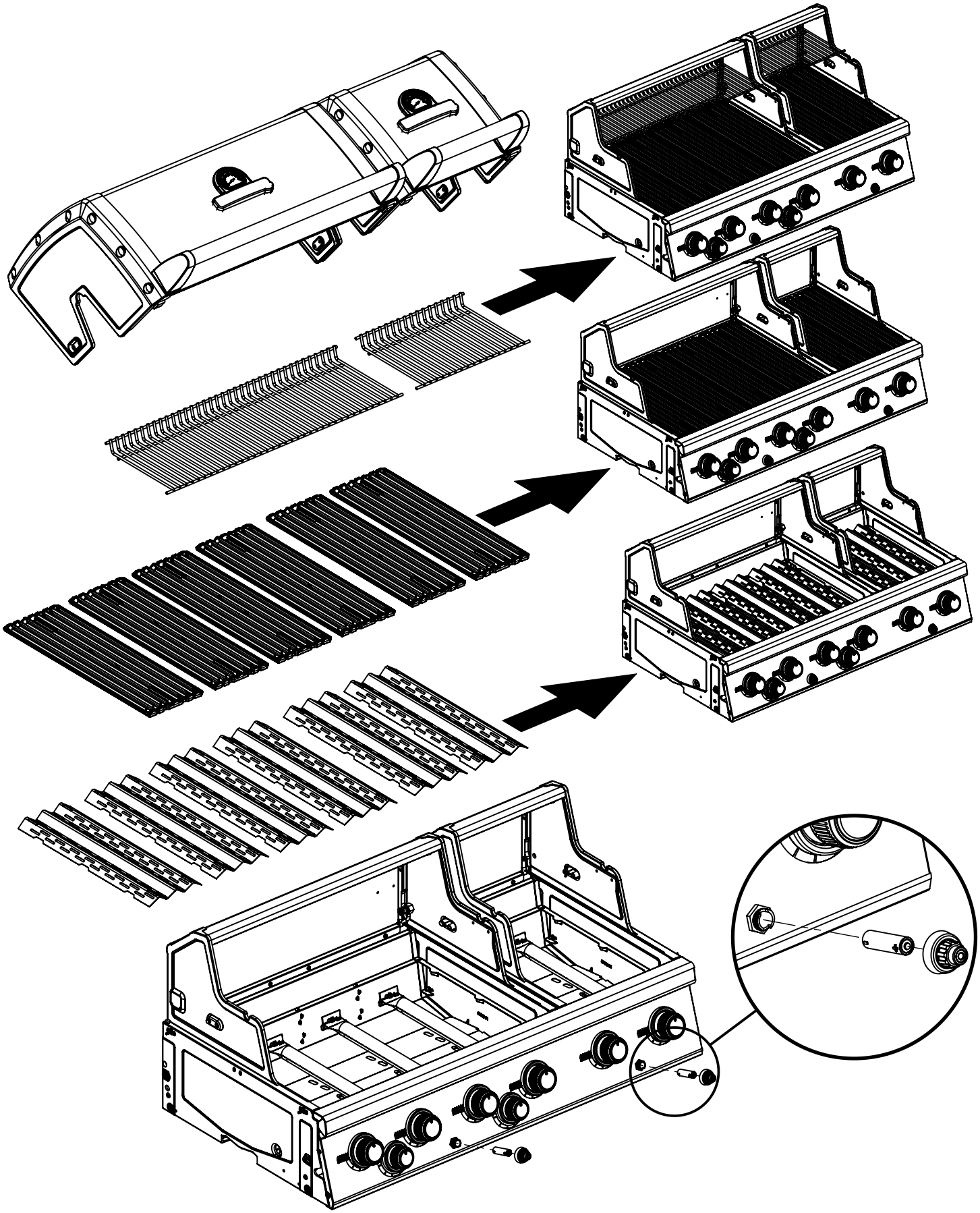

| 10 | |
|---|---|

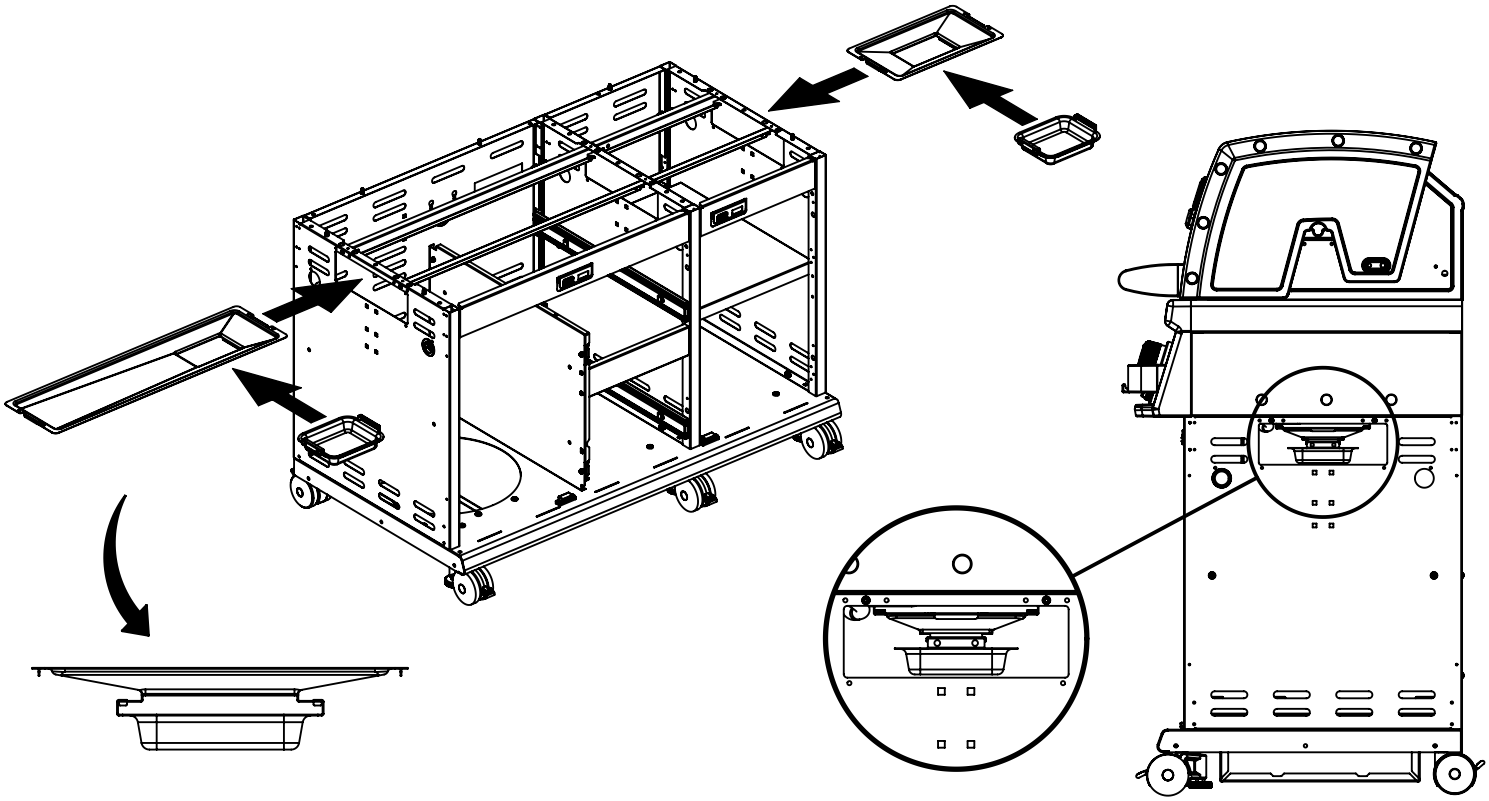

| 11 | (2) 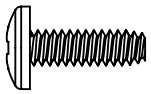 (2) |
|---|---|

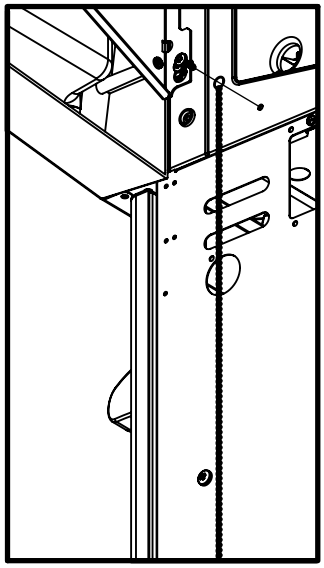

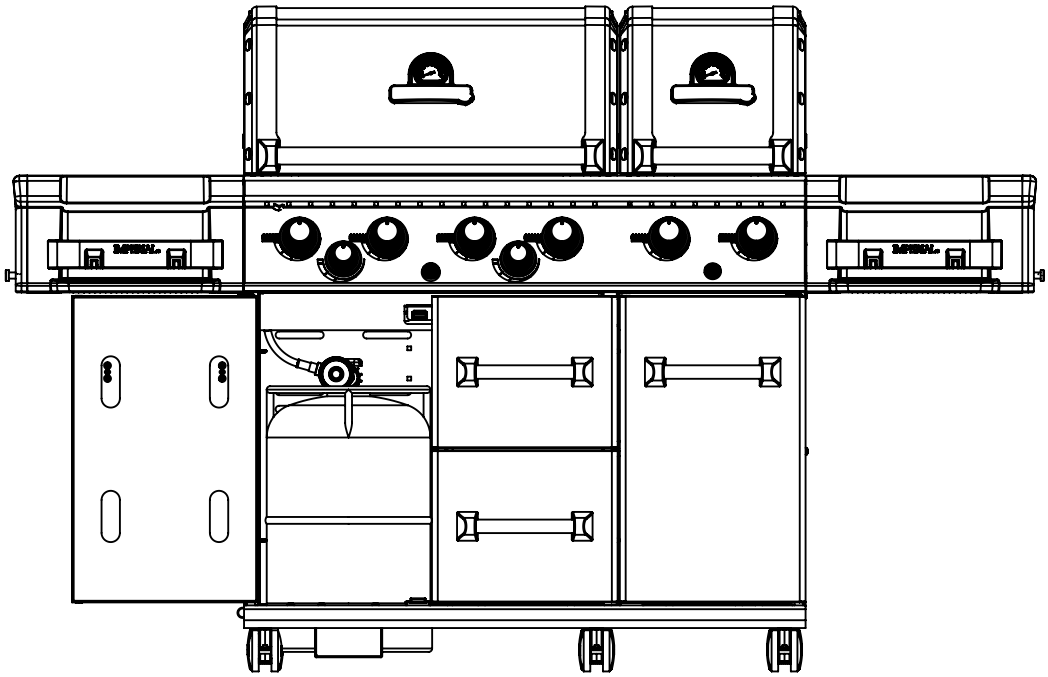

| | |
|---|---|
| **12** | (2) 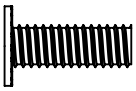 (2) |

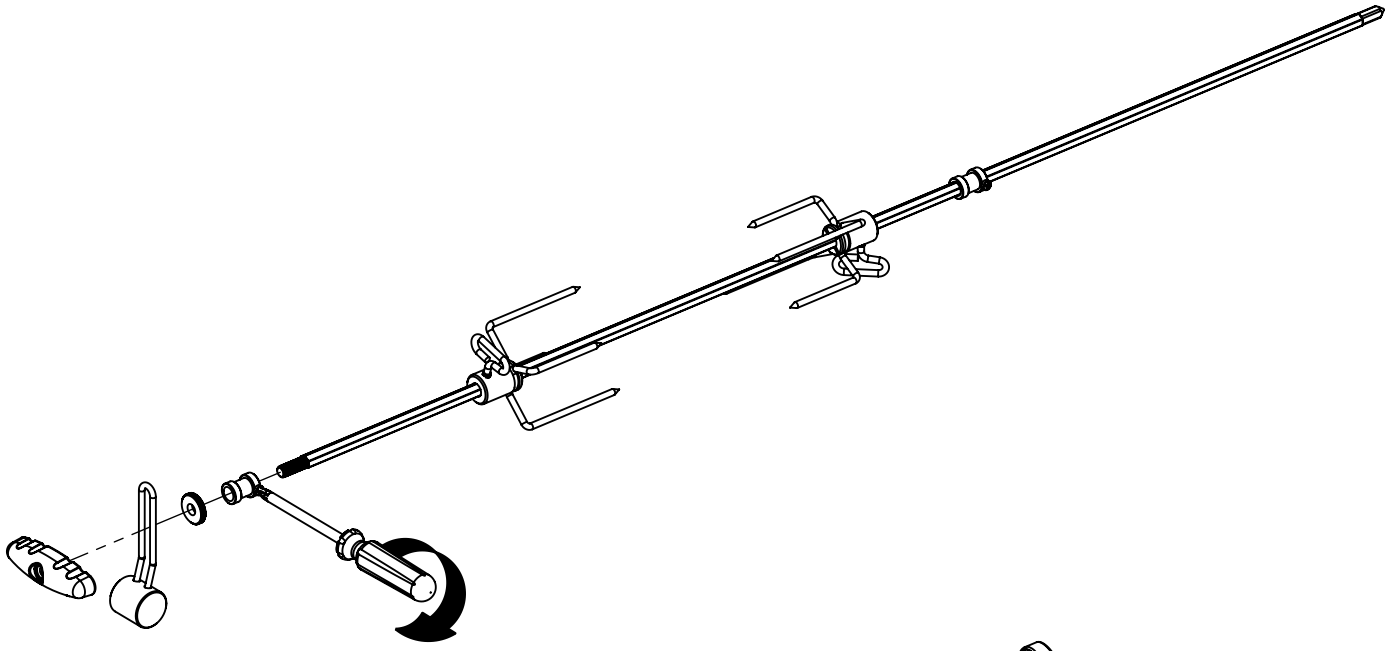

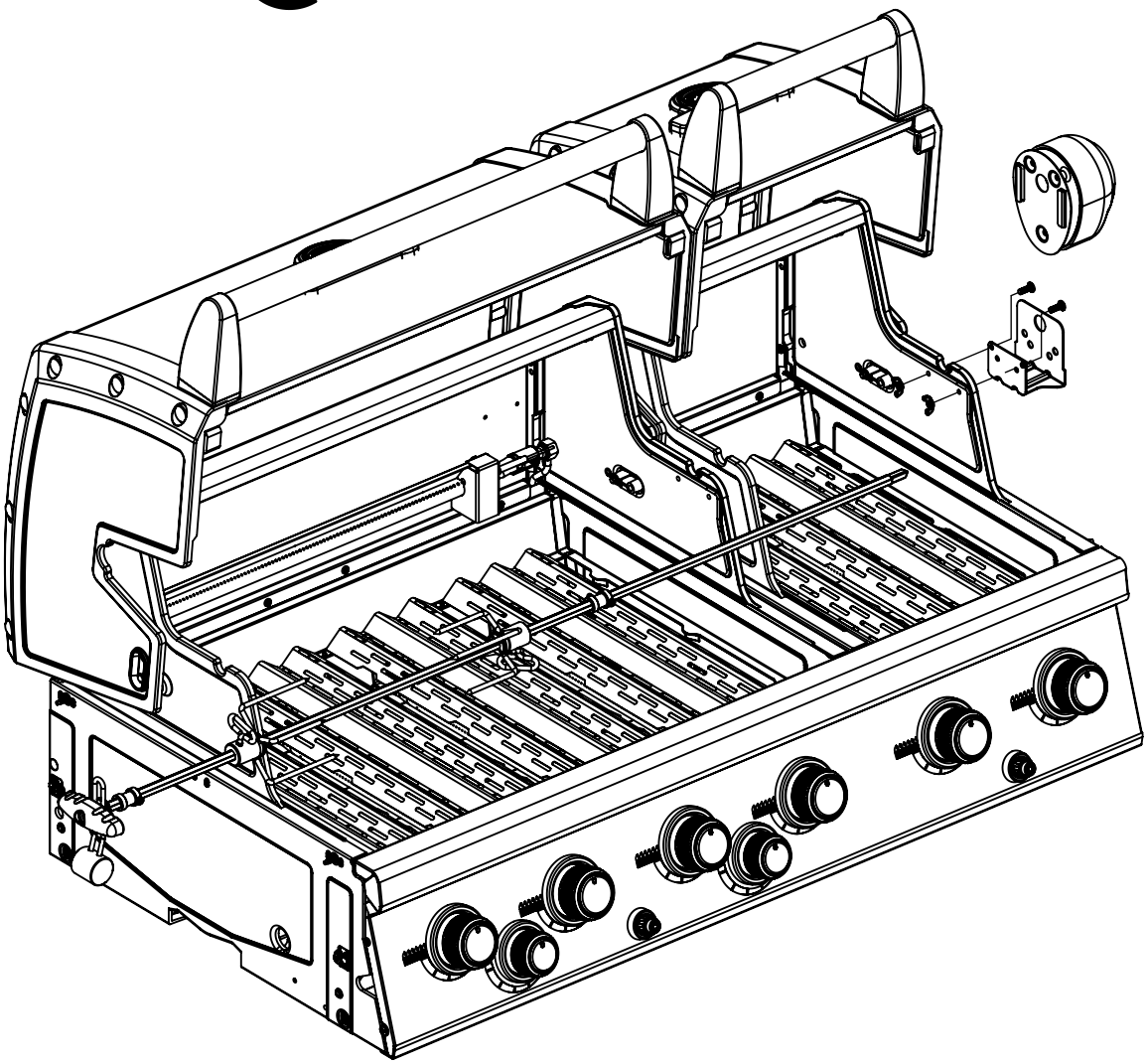

# PARTS LIST / LISTE DES PIECES

| KEY # | ITEM # | 9576-42 | 9576-43 | 9576-46 | 9576-82 | 9576-83 | 9576-86 |
|---|---|---|---|---|---|---|---|
| 1 | 87109-931 | 2 | 2 | 2 | 2 | 2 | 2 |
| 2 | 87109-911 | 2 | 2 | 2 | 2 | 2 | 2 |
| 3 | 27205-014 | 1 | 1 | 1 | 1 | 1 | 1 |
| 3A | 27203-014 | 1 | 1 | 1 | 1 | 1 | 1 |
| 4 | 27205-924R | 1 | 1 | 1 | 1 | 1 | 1 |
| 4A | 27203-924R | 1 | 1 | 1 | 1 | 1 | 1 |
| 5 | 27245-904 | 1 | 1 | 1 | 1 | 1 | 1 |
| 5A | 27243-904 | 1 | 1 | 1 | 1 | 1 | 1 |
| 6 | 27005-91 | 3 | 3 | 3 | 3 | 3 | 3 |
| 6A | 27003-91 | 3 | 3 | 3 | 3 | 3 | 3 |
| 7 | Y-11544 | 6 | 6 | 6 | 6 | 6 | 6 |
| 10 | 82305-021R | 1 | 1 | 1 | 1 | 1 | 1 |
| 10A | 82303-021R | 1 | 1 | 1 | 1 | 1 | 1 |
| 12 | 82315-021 | 1 | 1 | 1 | 1 | 1 | 1 |
| 12A | 82313-021 | 1 | 1 | 1 | 1 | 1 | 1 |
| 18 | 22022-284 | 2 | 2 | 2 | • | • | • |
| | 22005-281 | 2 | 2 | 2 | 6 | 6 | 6 |
| 20 | 22005-991 | 1 | 1 | 1 | 1 | 1 | 1 |
| 20A | 22003-991 | 1 | 1 | 1 | 1 | 1 | 1 |
| 22 | 22225-014 | 1 | 1 | 1 | 1 | 1 | 1 |
| 22A | 27223-014 | 1 | 1 | 1 | 1 | 1 | 1 |
| 24 | 22215-014 | 1 | 1 | 1 | 1 | 1 | 1 |
| 24A | 27213-014 | 1 | 1 | 1 | 1 | 1 | 1 |
| 25 | 22909-104DE | 6 | • | • | 6 | • | • |
| | 22909-104E | • | 6 | • | • | 6 | • |
| | 22909-104NGE | • | • | 6 | • | • | 6 |
| 26 | 22001-768 | 6 | 6 | 6 | 6 | 6 | 6 |
| 26A | 22001-668 | 2 | 2 | 2 | 2 | 2 | 2 |
| 27 | 22002-264 | 6 | 6 | 6 | 6 | 6 | 6 |
| 27A | 22001-164 | 2 | 2 | 2 | 2 | 2 | 2 |
| 28 | 27008-474 | 1 | 1 | 1 | 1 | 1 | 1 |
| 34 | S13470-066 | 1 | • | • | 1 | • | • |
| | S13470-079 | • | 1 | • | • | 1 | • |
| | S13470-109 | • | • | 1 | • | • | 1 |
| 34A | Y-11230 | 1 | 1 | 1 | 1 | 1 | 1 |
| 35 | 29018-071 | 1 | • | • | 1 | • | • |
| | 29018-075 | • | 1 | • | • | 1 | • |
| | 29018-078 | • | • | 1 | • | • | 1 |
| 36 | 10342-T18 | 1 | 1 | 1 | 1 | 1 | 1 |
| 37 | 20809-957 | 1 | 1 | 1 | 1 | 1 | 1 |
| 38 | Y-11990 | 1 | 1 | 1 | 1 | 1 | 1 |
| 43 | 10342-E13 | 3 | 3 | 3 | 3 | 3 | 3 |
| 44 | 10342-247 | 1 | 1 | 1 | 1 | 1 | 1 |
| 44A | 10342-244 | 1 | 1 | 1 | 1 | 1 | 1 |
| 47 | 21035-991 | 2 | 2 | 2 | 2 | 2 | 2 |
| 47A | 21033-991 | 2 | 2 | 2 | 2 | 2 | 2 |
| 48 | 22009-901 | 2 | 2 | 2 | 2 | 2 | 2 |
| 49 | 27055-901 | 1 | 1 | 1 | 1 | 1 | 1 |
| 49A | 27053-901 | 1 | 1 | 1 | 1 | 1 | 1 |
| 51 | 22209-904 | 6 | 6 | 6 | 6 | 6 | 6 |
| 52 | 86101-631 | 2 | 2 | 2 | 2 | 2 | 2 |
| 53 | 86101-611 | 2 | 2 | 2 | 2 | 2 | 2 |
| 54 | 86305-614 | 1 | 1 | 1 | 1 | 1 | 1 |
| 54A | 86303-614 | 1 | 1 | 1 | 1 | 1 | 1 |
| 55 | 86205-61 | 1 | 1 | 1 | 1 | 1 | 1 |
| 55A | 86203-61 | 1 | 1 | 1 | 1 | 1 | 1 |
| 56 | 24005-239 | 1 | 1 | 1 | 1 | 1 | 1 |
| 56A | 24003-239 | 1 | 1 | 1 | 1 | 1 | 1 |
| 58 | 26009-917 | 4 | 4 | 4 | 4 | 4 | 4 |
| 58A | 24009-938 | 4 | 4 | 4 | 4 | 4 | 4 |
| 59 | 10081-BK630 | 2 | 2 | 2 | 2 | 2 | 2 |
| 60 | 10571-6 | 2 | 2 | 2 | 2 | 2 | 2 |
| 65 | 20005-000 | 2 | 2 | 2 | 2 | 2 | 2 |
| 68 | 21175-114A | 1 | 1 | 1 | 1 | 1 | 1 |
| 69 | 21175-134A | 1 | 1 | 1 | 1 | 1 | 1 |
| 70 | 21079-906 | 8 | 8 | 8 | 8 | 8 | 8 |
| 71 | 21171-23 | 4 | 4 | 4 | 4 | 4 | 4 |
| 74 | Y-99100 | 2 | 2 | 2 | 2 | 2 | 2 |
| 75 | 21365-904 | 2 | 2 | 2 | 2 | 2 | 2 |
| 76 | 21265-905 | 2 | 2 | 2 | 2 | 2 | 2 |
| 77 | 21269-901 | 2 | 2 | 2 | 2 | 2 | 2 |
| 78 | 21335-111 | 1 | 1 | 1 | 1 | 1 | 1 |

# PARTS LIST / LISTE DES PIECES

| KEY # | ITEM # | 9576-42 | 9576-43 | 9576-46 | 9576-82 | 9576-83 | 9576-86 |
|---|---|---|---|---|---|---|---|
| 78A | 21333-921 | 1 | 1 | 1 | 1 | 1 | 1 |
| 80 | 21109-905R | 3 | 3 | 3 | 3 | 3 | 3 |
| 82 | 25208-201R | 1 | 1 | 1 | 1 | 1 | 1 |
| 83 | 21065-905R | 1 | 1 | 1 | 1 | 1 | 1 |
| 84 | 21069-901 | 1 | 1 | 1 | 1 | 1 | 1 |
| 88 | 21305-925R | 1 | 1 | 1 | 1 | 1 | 1 |
| 88A | 25308-925R | 1 | 1 | 1 | 1 | 1 | 1 |
| 90 | 25098-935 | 1 | 1 | 1 | 1 | 1 | 1 |
| 100 | 21039-911 | 3 | 3 | 3 | 3 | 3 | 3 |
| 101 | 21039-301 | 1 | 1 | 1 | 1 | 1 | 1 |
| 102 | 10892-23 | 3 | 3 | 3 | 3 | 3 | 3 |
| 102A | 10892-285 | 3 | 3 | 3 | 3 | 3 | 3 |
| 110 | 23729-355 | 2 | 2 | 2 | 2 | 2 | 2 |
| 111 | 23729-345 | 2 | 2 | 2 | 2 | 2 | 2 |
| 112 | 23512-431 | 1 | 1 | 1 | 1 | 1 | 1 |
| 113 | 23512-411 | 1 | 1 | 1 | 1 | 1 | 1 |
| 114 | 23102-614 | 1 | 1 | 1 | 1 | 1 | 1 |
| 115 | 23102-654 | 1 | 1 | 1 | 1 | 1 | 1 |
| 117 | 23002-205 | 2 | 2 | 2 | 2 | 2 | 2 |
| 120 | 23729-614 | 2 | 2 | 2 | 2 | 2 | 2 |
| 124 | 23000-271 | 1 | 1 | 1 | 1 | 1 | 1 |
| 125 | 23000-254 | 1 | 1 | 1 | 1 | 1 | 1 |
| 126 | 23909-20DE | 1 | • | • | 1 | • | • |
| | 23909-20E | • | 1 | • | • | 1 | • |
| | 23909-20NGE | • | • | 1 | • | • | 1 |
| 128 | 23009-98 | 1 | 1 | 1 | 1 | 1 | 1 |
| 130 | 27905-354DE | 1 | • | • | 1 | • | • |
| | 27905-354E | • | 1 | • | • | 1 | • |
| | 27905-354NGE | • | • | 1 | • | • | 1 |
| 131 | 10693-099 | 1 | 1 | 1 | 1 | 1 | 1 |
| 133 | S15271 | 1 | 1 | 1 | 1 | 1 | 1 |
| 134 | S15270 | 1 | 1 | 1 | 1 | 1 | 1 |
| 135 | S15299 | 1 | 1 | 1 | 1 | 1 | 1 |
| 136 | S15263 | 2 | 2 | 2 | 2 | 2 | 2 |
| 137 | S15260 | 1 | 1 | 1 | 1 | 1 | 1 |
| 138 | S15287 | 2 | 2 | 2 | 2 | 2 | 2 |
| 139 | 57039-901 | 1 | 1 | 1 | 1 | 1 | 1 |
| 140 | S21125 | 34 | 34 | 34 | 34 | 34 | 34 |
| 141 | Y-12310 | 8 | 8 | 8 | 8 | 8 | 8 |
| 143 | Y-12855 | 48 | 48 | 48 | 48 | 48 | 48 |
| 144 | Y-12220 | 1 | 1 | 1 | 1 | 1 | 1 |
| 145 | S21235 | 2 | 2 | 2 | 2 | 2 | 2 |
| 145A | 10240-17 | 1 | 1 | 1 | 1 | 1 | 1 |
| 146 | S21233 | 3 | 3 | 3 | 3 | 3 | 3 |
| 147 | Y-11231 | 4 | 4 | 4 | 4 | 4 | 4 |
| 147A | SP11-25 | 4 | 4 | 4 | 4 | 4 | 4 |
| 148 | 10240-20 | 2 | 2 | 2 | 2 | 2 | 2 |
| 149 | 10240-19 | 2 | 2 | 2 | 2 | 2 | 2 |
| 150 | Y-12124 | 2 | 2 | 2 | 2 | 2 | 2 |
| 151 | Y-11567 | 8 | 8 | 8 | 8 | 8 | 8 |
| 152 | Y-12222 | 2 | 2 | 2 | 2 | 2 | 2 |
| 153 | Y-12223 | 2 | 2 | 2 | 2 | 2 | 2 |
| 154 | Y-11560 | 12 | 12 | 12 | 12 | 12 | 12 |
| 155 | S21124 | 70 | 70 | 70 | 70 | 70 | 70 |
| 156 | Y-11793 | 40 | 40 | 36 | 40 | 40 | 36 |
| 157 | Y-12835 | 3 | 3 | 3 | 3 | 3 | 3 |
| 158 | Y-12646 | 2 | 2 | 2 | 2 | 2 | 2 |
| 159 | S21136 | 12 | 12 | 12 | 12 | 12 | 12 |
| 160 | Y-29304 | 67 | 67 | 67 | 67 | 67 | 67 |
| 161 | Y-29310 | 4 | 4 | 4 | 4 | 4 | 4 |
| 162 | S35095 | 2 | 2 | 2 | 2 | 2 | 2 |
| 163 | S35094 | 8 | 8 | 8 | 8 | 8 | 8 |
| 164 | S21084 | 8 | 8 | 8 | 8 | 8 | 8 |
| 165 | Y-12127 | 2 | 2 | 2 | 2 | 2 | 2 |
| 166 | Y-11981 | 24 | 24 | 24 | 24 | 24 | 24 |
| 167 | Y-11987 | 6 | 6 | 6 | 6 | 6 | 6 |
| 169 | S21061 | 2 | 2 | 2 | 2 | 2 | 2 |
| 170 | Y-12084 | 10 | 10 | 10 | 10 | 10 | 10 |
| 171 | S15242 | 1 | 1 | 1 | 1 | 1 | 1 |
| 172 | 23502-507 | 6 | 6 | 6 | 6 | 6 | 6 |
| 173 | S21362 | 1 | 1 | 1 | 1 | 1 | 1 |
| 186 | Y-12865 | 44 | 44 | 40 | 44 | 44 | 40 |

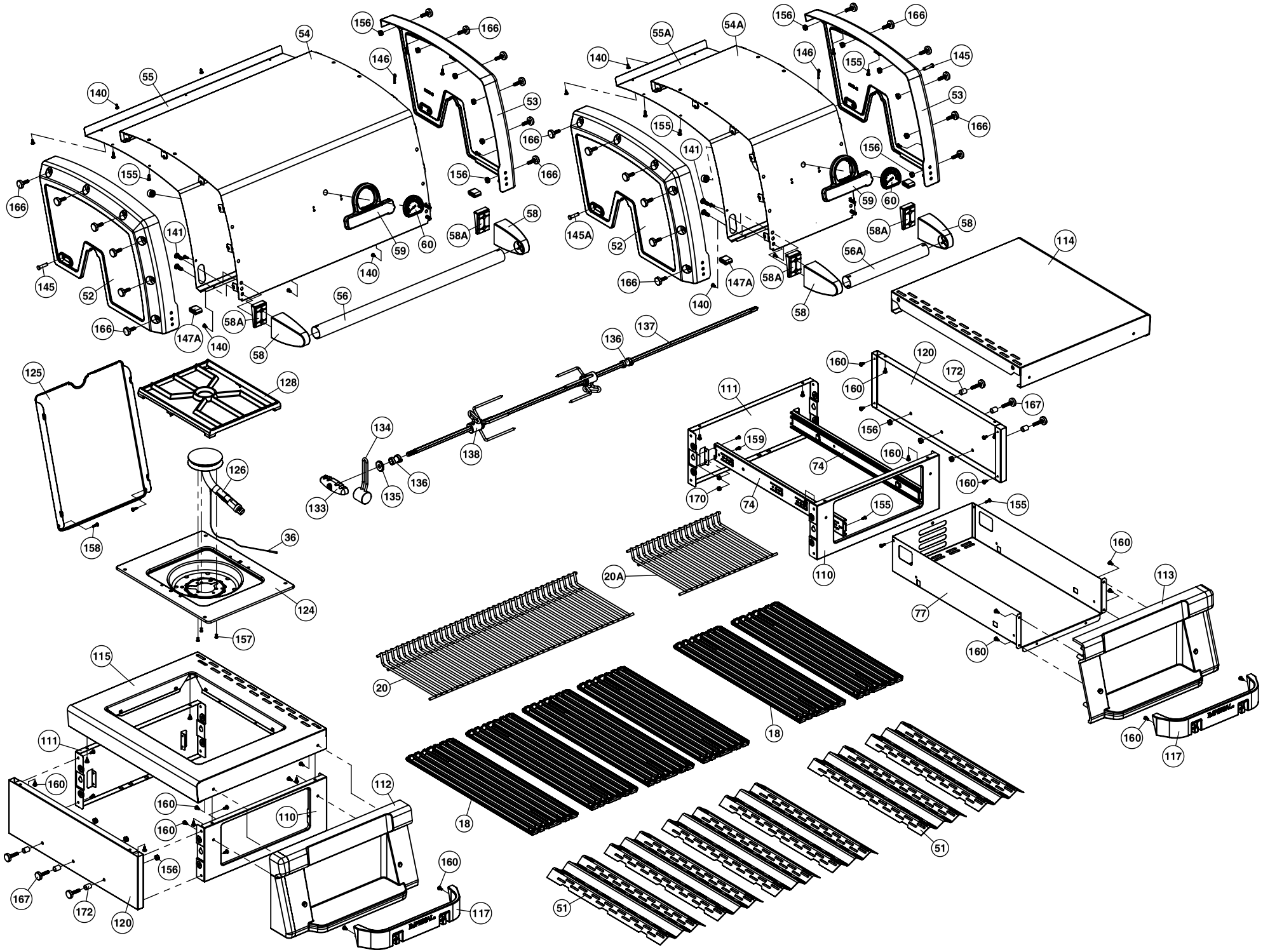
54
55
140
156
166
146
53
155
145
52
141
59
60
58A
58
56
147A
136
137
138
134
133
135
125
128
126
36
124
157
158
114
120
172
167
111
159
74
170
110
155
160
20A
20
18
51
77
113
117
112
115

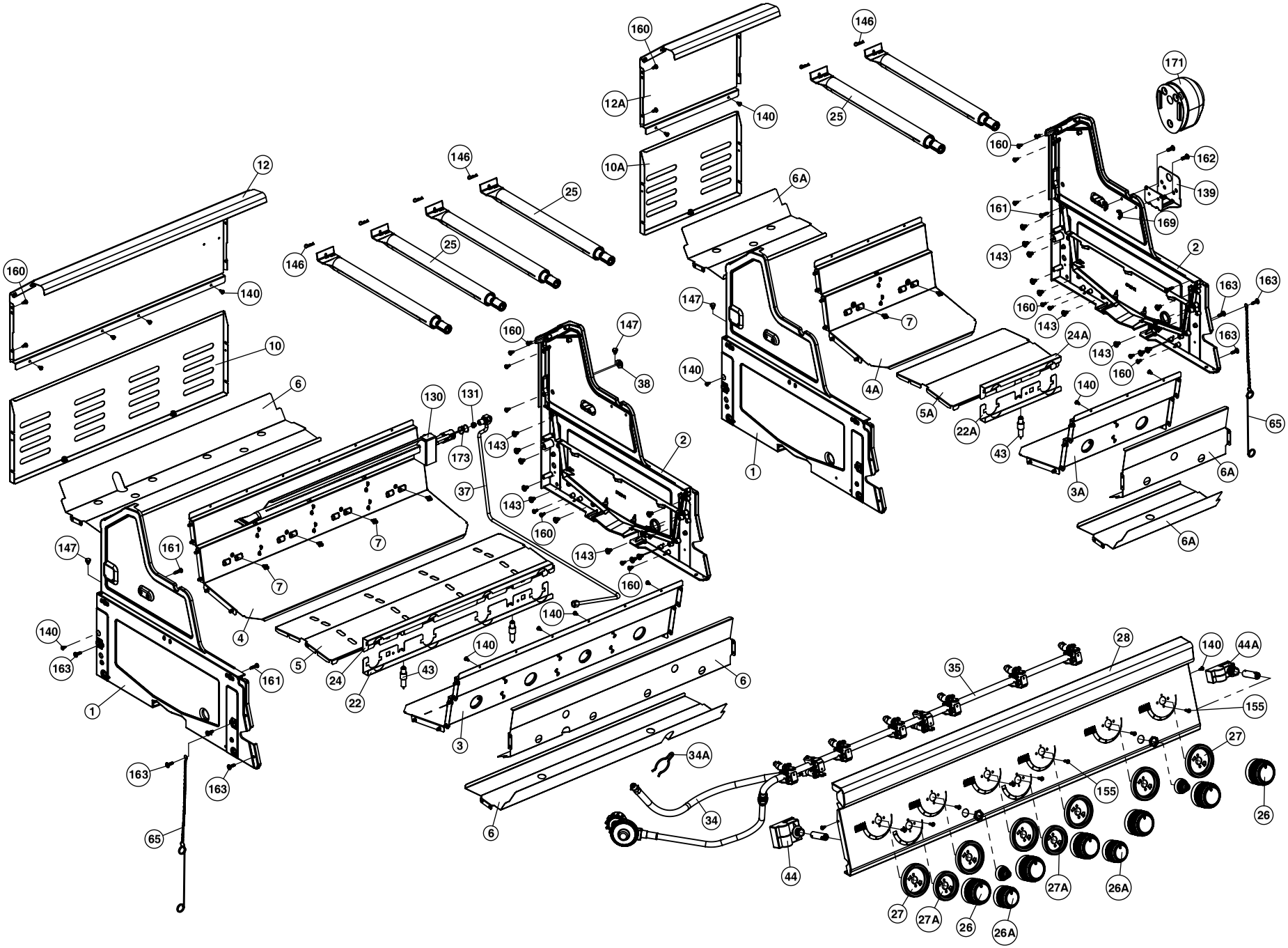
160
12A
140
10A
146
25
6A
171
162
139
161
169
143
2
163
24A
12
10
6
130
131
173
37
38
147
1
7
4A
5A
22A
43
3A
65
4
5
24
22
3
34A
34
44
28
35
44A
155
27
26
27A
26A

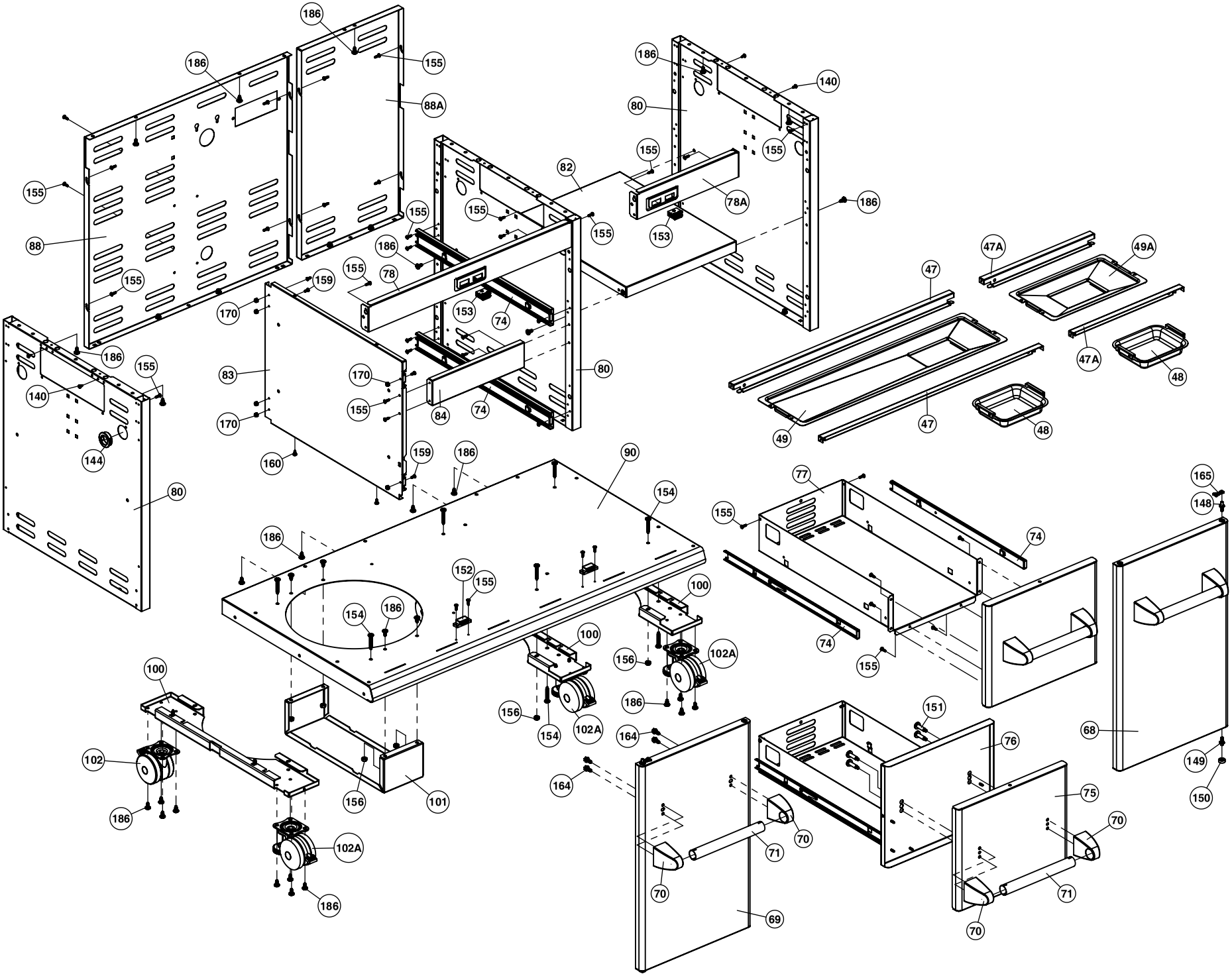
186
155
88A
140
80
82
78A
153
88
78
159
170
74
83
84
160
144
90
154
152
100
102A
156
101
102
164
151
76
75
68
149
150
165
148
77
70
71
69
47
47A
49A
48
49